SYMBOL DEFINITION			MISSING SYMBOLS
A DIMENSION WITHOUT AN INSPECTION REPORT SYMBOL ☐ DOES NOT REQUIRE INSPECTION. IT MAY BE CONTROLLED ON THE INDIVIDUAL COMPONENT DRAWING.	TOTAL NO OF INSPECTIONS REQUIRED	20	NO MISSING SYMBOL NUMBER
	LAST NO. USED	8	

DWG STATUS DATE	STB	REV	N/P	CHG	ZONE	REVISION HISTORY	AUTH	DR	APVD I.E.	APVD E.C.
17AU01	R	01	-	-	-	WAS PE082092 & RELEASED	212995	EES	JNR	M.C
22AU01	R	02	-	-	-	11.4 WAS ±0.54, 25.59 WAS 25.47, 6.04 WAS 5.96	213573	C.P	C.P	M.C
11SE01	R	03	-	-	-	ADDED APPROCH ANGLE TO LOCK ARMS	214209	BRB	BRB	M.C
11DE01	R	03	AA	-	-	ADDED 4X 5.6, PSD WAS 6	218604	C.P	C.P	MC
09DE03	R	03	AB	-	-	2X 6.04 +0.15/-0.3 WAS 2X 6.04±; 25.59 +0.2/-0.5 WAS 25.59	249833	ADK	ADK	MC

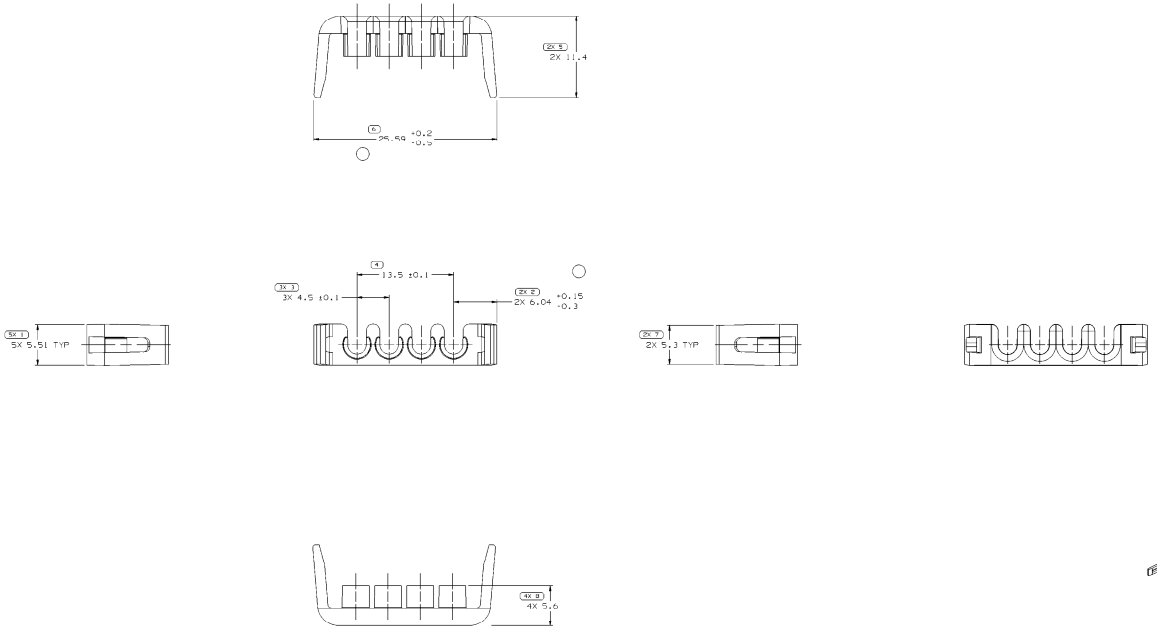

NOTES

1. UNLESS OTHERWISE SPECIFIED AND/OR INDICATED:
   DIMENSIONS ARE TO FACE OF VIEW SHOWN AND AUTOMATICALLY ROUNDED BY COMPUTER FOR INSPECTION (SEE MATH MODEL FOR PRECISE DIMENSIONS). FOR ALL OTHER DIMENSIONS NOT SHOWN BUT REQUIRED FOR TOOL BUILD, SEE MATH MODEL FOR PRECISE TOOL PATH DATA.
   ALL RADII 0.4
   DRAFT IS 1° ON ALL OUTSIDE SURFACES
   LIKE CAVITIES ARE IDENTICAL
   LOCKING FEATURES ARE IDENTICAL
2. TOOL CAVITY IDENTIFICATION SHOULD BE LOCATED AS CLOSE TO THE GATE AS POSSIBLE.
3. MATING COMPONENTS OR EQUIVALENT:
   CONNECTOR 15326814

DIMENSIONAL BASIC (MM)												
FROM	0.5	3.15	6	30	>70	>100	>160	>250	>400	>630	>1000	>1600
TO	3	6	30	70	100	160	250	400	630	1000	1600	2500
ALLOWANCE PLUS OR MINUS SPECIFIED												
±0.15	±0.2	±0.3	±0.5	±0.8	±1.2	±2	±3	±4	±5	±6.5	±8	±10

ANGULAR TOLERANCE ±0°

± 0.1 MAX
± 0.2 MAX
SHARP CORNER TOLERANCE

NAME TYPE	PART DRAWING
STYLE	DMT-360
VOLUME (CUFT)	0.336
DATA USE	D
ROUTING	6901

UNLESS OTHERWISE SPECIFIED
THIS DOCUMENT IS IN ACCORDANCE WITH ANSI Y14.5M-1994 UNLESS OTHERWISE SPECIFIED. THIS DRAWING IS TO BE FOLLOWED IN PERFORMING WORK. DIMENSIONS PERTAINING TO FEATURES ARE NOT MANDATORY UNLESS SPECIFIED OR DATUM REFERENCED.

ALL DIMENSIONS ARE IN MILLIMETERS

REFERENCE

THIRD ANGLE PROJECTION

DO NOT SCALE

USE MATH DATA

DELPHI

DELPHI PACKARD ELECTRIC SYSTEMS
WARREN, OH

DR	DATE
APVD1 E. SEIDEL	17AU01
APVD2 J. RICHARDSON	17AU01
APVD3 M. CULP	20AU01
APVD4	
APVD5	

SUBSTANCES OF CONCERN AND RECYCLED CONTENT PER DELPHI 12994001

MATERIAL
M2571009 PA6 10820-GF101 HS - PPL

DRAWING NAME
LOCK TPA GT 150 PPL

DRAWING NUMBER
15418546

SIZE	SCALE	FRAME NO	SHEET NO	STB	REV	N/P
A0	5:1	1 OF 1	1 OF 1	R	03	AB