SYMBOL DEFINITION		
A DIMENSION WITHOUT AN INSPECTION REPORT SYMBOL (_) DOES NOT REQUIRE INSPECTION. IT MAY BE CONTROLLED ON THE INDIVIDUAL COMPONENT DRAWING.	TOTAL NO OF INSPECTIONS REQUIRED	23
	LAST NO. USED	13

MISSING SYMBOLS: NO MISSING SYMBOL NUMBER

DWG STATUS DATE	STG	REV	N/P	CHG	ZONE	REVISION HISTORY	AUTH	DR	APVD 1	APVD 2
11JA05	U	01	-	-		PD CREATED	263214	BRB	BRB	JCU
06APO5	R	01	AA	-		REVISED TOL (2 PLCS) AND NOTES 2 & 5	266730	GPS	FRG	JCU
09JN05	R	01	AB	-		REVISED TOL (1 PLC)	269146	JTV	FKV	RMF

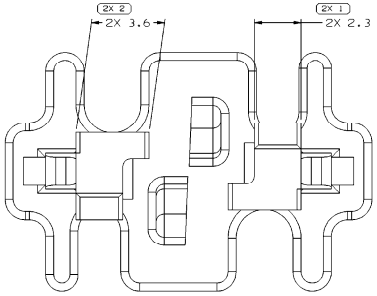

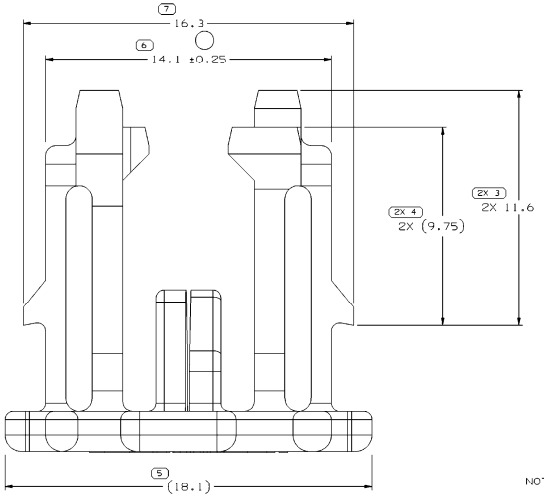

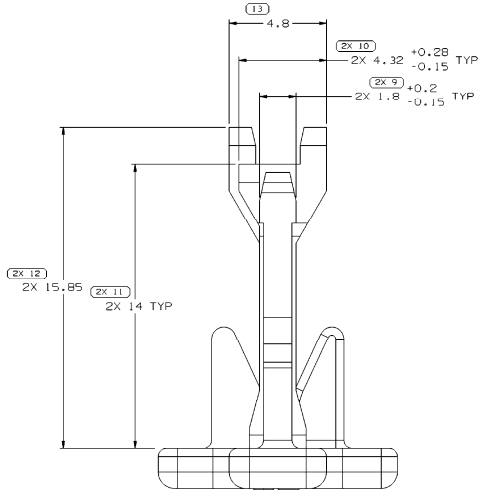

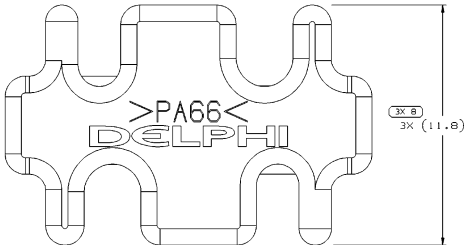

NOTES

1. UNLESS OTHERWISE SPECIFIED AND/OR INDICATED:

   DIMENSIONS ARE TO FACE OF VIEW SHOWN AND AUTOMATICALLY ROUNDED BY COMPUTER FOR INSPECTION (SEE MATH MODEL FOR PRECISE DIMENSIONS). FOR ALL OTHER DIMENSIONS NOT SHOWN BUT REQUIRED FOR TOOL BUILD, SEE MATH MODEL FOR PRECISE TOOL PATH DATA.

2. MATERIAL RECYCLING CODE PER ISO 11469. (1)X(0.05) CHARACTERS AS SHOWN TO BE LOCATED ON ANY EXTERIOR SURFACE. OPTIONAL CONSTRUCTION TO BE NO MATERIAL RECYCLING CODE.
3. THIS PART IS NOT CONTROLLED FOR AUTOMATIC FEEDING.
4. REFERENCE MATING COMPONENTS OR EQUIVALENT:

   CONNECTOR 13517799

5. (1)X(0.05) DELPHI CORPORATE BRAND TO BE LOCATED ON ANY EXTERIOR SURFACE, PREFERABLY VISIBLE AT FINAL ASSEMBLY. OPTIONAL CONSTRUCTION FOR EXISTING TOOLING MAY BE NO LOGO.

(N/A) PROCESS SENSITIVE DIMENSION

DIMENSIONS ENCLOSED IN ( ) INDICATE REFERENCE DIMENSIONS AND NO TOLERANCE LIMITS ARE ESTABLISHED

DIMENSIONAL RANGE (MM) FROM	TO	>0 20	>20 30	>30 70	>70 100	>100 150	>150 200	>200 250	>250 300	>300 400
TOLERANCE UNLESS OTHERWISE SPECIFIED		±0.15	±0.2	±0.3	±0.4	±0.5	±0.6	±0.8	±1	±1.2

CHART F1

ANGULAR TOLERANCE ±2°

DWG TYPE: PART DRAWING

STYLE

VOLUME (CM³): 0.499

DISTR CODE

UNLESS OTHERWISE SPECIFIED

THIS DOCUMENT IS IN ACCORDANCE WITH ASME Y14.5M-1994 AS AMENDED BY THE GM GLOBAL DIMENSIONING AND TOLERANCING ADDENDUM 2001. SEPARATE PATTERNS OF FEATURES MAY BE GAGED SEPARATELY REGARDLESS OF DATUM REFERENCES.

ALL DIMENSIONS ARE IN MILLIMETERS

REFERENCE

THIRD ANGLE PROJECTION

DO NOT SCALE

USE MATH DATA

UGS UNIGRAPHICS

DELPHI

DELPHI PACKARD ELECTRIC SYSTEMS
WARREN, OH

		DATE
DR		
APVD1	BARRY BURNS	11JA05
APVD2	BARRY BURNS	11JA05
APVD3	J.C.URREA	14JA05
APVD4		
APVD5		

SUBSTANCES OF CONCERN AND RECYCLED CONTENT PER DELPHI 10949001

MATERIAL: M3592008 PA66 HS IM BLU

DRAWING NAME: LOCK TPA M/P MIXED 4 BLU

DRAWING NUMBER: 13517800

SIZE	SCALE	FRAME NO	SHEET NO	STG	REV	N/P
A1	10:1	1 OF 1	1 OF 1	R	01	AB