SYMBOL DEFINITION		
A DIMENSION WITHOUT AN INSPECTION REPORT SYMBOL (□) DOES NOT REQUIRE INSPECTION. IT MAY BE CONTROLLED ON THE INDIVIDUAL COMPONENT DRAWING.	TOTAL NO OF INSPECTIONS REQUIRED	5
	LAST NO. USED	5

MISSING SYMBOLS
NO MISSING SYMBOL NUMBER

DWG STATUS					ZONE	REVISION HISTORY	AUTH	DR	APVD	APVD
DATE	STR	REC	N/P	DIB					1	2
18DE17	R	01	-	-	-	CREATED PART DRAWING	4386-42	WANG	WU	JAYZ

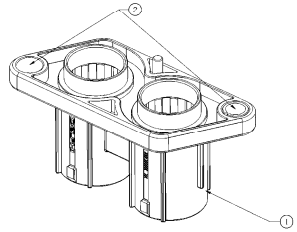

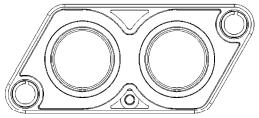

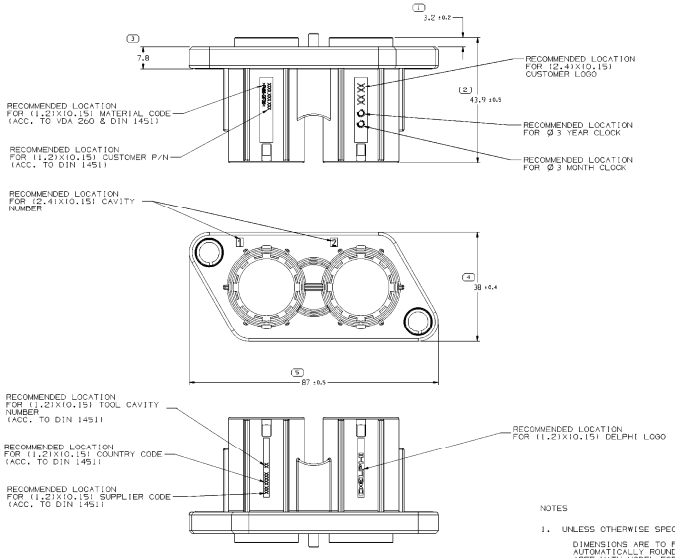

NOTES

1. UNLESS OTHERWISE SPECIFIED AND/OR INDICATED:

   DIMENSIONS ARE TO FACE OF VIEW SHOWN AND AUTOMATICALLY ROUNDED BY COMPUTER FOR INSPECTION (SEE MATH MODEL FOR PRECISE DIMENSIONS). FOR ALL OTHER DIMENSIONS NOT SHOWN BUT REQUIRED FOR TOOL BUILD, SEE MATH MODEL FOR PRECISE TOOL PATH DATA.

2. THIS PRODUCT IS NOT CATEGORIZED AS AN APPEARANCE ITEM. MINOR IMPERFECTIONS INCLUDING, BUT NOT LIMITED TO, FLOW MARKS, COLOR BLEMISHES, GATE VESTIGE, AND SOFT FLASH THAT DO NOT AFFECT THE FIT, FORM, OR FUNCTION OF THE PART ARE PERMISSIBLE PER EANP_4-3_CS_01_EN.

3. TIGHTENING TORQUES FOR SCREW M6 IS 9 NM.

4. THE COMPONENTS SHOW ON THIS DRAWING USED IN ASSEMBLY SHOW ON LAYOUT DRAWING 33376179.

5. PACKING FLATWISE IN TRAY CORRUGATED IN CARTON.

POS	PART NUMBER	REV	DESCRIPTION	QTY	UOM	REF. WEIGHT(G)
2	33340531	-	BUSHING	2	PCS	-
1	33340529	-	HOUSING	1	PCS	-
A	33340525	01	ASM 2 WAY AK PASS THROUGH HOUSING	-	-	31.6

A THIS DRAWING TYPE(S) / FORM NUMBER(S) INDICATES THAT PHYSICAL PARTS ARE NOT AVAILABLE FOR ORDERING.

PART NUMBERS THAT OR DOT HAVE A LINE PRESENT INDICATE THAT PHYSICAL PARTS ARE AVAILABLE FOR ORDERING.

CONTACT DELPHI SALES TO ASSURE AVAILABILITY OF PARTS.

DWG TYPE: CUSTOMER PART DRAWING

STYLE

VOLUME (CM³): SEE CHART

SURFACE CODE:

UNLESS OTHERWISE SPECIFIED

THIS DOCUMENT IS IN ACCORDANCE WITH ISO8015 (1st EDITION 1985-07-15) AND ISO1101 (2nd EDITION 1983-12-15) GEOMETRICAL TOLERANCING. ALL DIMENSIONS AND TOLERANCES FEATURES ARE BY ISO8015 UNLESS OTHERWISE REFERENCED.

MATERIALS: SEE CHART

ALL DIMENSIONS ARE IN MILLIMETERS

(N/A) PROCESS INSPECTION STANDARDS: REFERENCE

DIMENSIONS INCLUDED IN A 3 INSPECTS ARE TO BE INSPECTED AS PER ISO 10360 UNLESS OTHERWISE SPECIFIED.

| STANDARD DRAWING TOLERANCE (MM) | | | | |