SYMBOL DEFINITION			MISSING SYMBOLS
A DIMENSION WITHOUT AN INSPECTION REPORT SYMBOL ⬭ DOES NOT REQUIRE INSPECTION. IT MAY BE CONTROLLED ON THE INDIVIDUAL COMPONENT DRAWING.	TOTAL NO OF INSPECTIONS REQUIRED	59	17
	LAST NO. USED	40	

DWG STATUS DATE	STG	REV	N/P	CHG	ZONE	REVISION HISTORY	AUTH	DR	APVD 1	APVD 2
28OC15	R	01	-	-		ALL PARTS - RELEASED PART DRAWING	431255	SM	SM	SSS
23NO15	R	02	-	-		REVISED GRAPHICS	431467	SM	SM	SSS
16MR16	R	03	-	-		REMOVED DIM #17 & BASIC DIM 2X 5.48 TYP	432094	KV	KV	SSS
09JL16	R	04	-	-		SEPERATED FEATURE CONTROL FRAME ON DIMS #33 & #35, REVISED INTERCHANGEABLE TOOL NOTE & TOLS ON DIM (18 PLCS) AND ADDED EJECTOR PIN NOTES	432604	SM	SM	SSS
18JL16	R	05	-	-		REVISED DIM (7 PLCS) & DIM TOL (13 PLCS)	433596	SM	SM	SSS
06OC16	R	06	-	-		ADDED NOTES	434474	KA	KA	DDJ
03NO16	R	07	-	-		REVISED GRAPHICS	434722	SM	SM	DDJ
21NO16	R	08	-	-		REVISED ACCEPTANCE CRITERIA DEVIATIONS NOTE	434973	SM	SM	DDJ
07DE16	R	09	-	-		ADDED OPTIONAL CONSTRUCTION VIEW AND REVISED PART AVAILABILITY	435081	MSD	MSD	DDJ
13JA17	R	10	-	-		DIM #10 WAS 6.55 +/-0.1 & DIM #9 WAS 4.15	435355	SM	SM	DDJ
22MY17	R	11	-	-		REVISED TOLERANCES (5 PLCS)	436783	MSD	MSD	DDJ

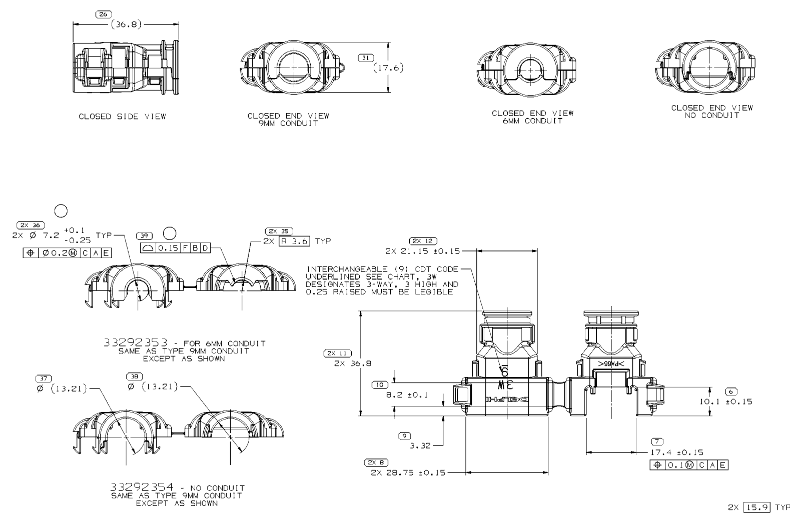

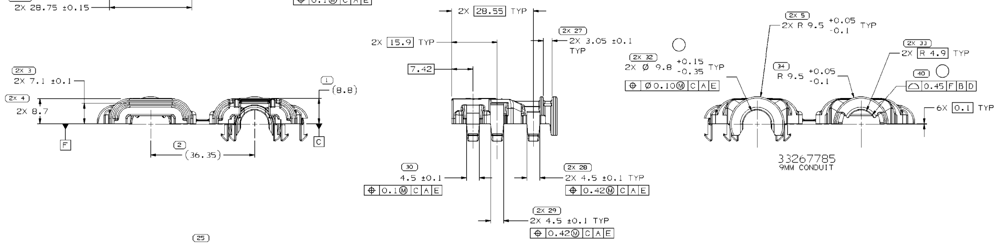

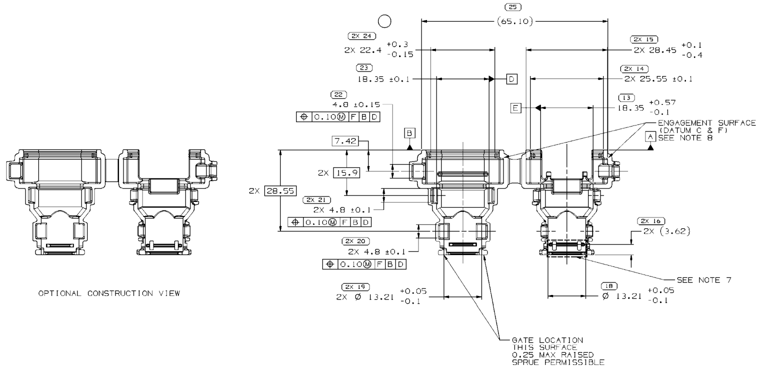

NOTES

1. UNLESS OTHERWISE SPECIFIED AND/OR INDICATED:

   DIMENSIONS ARE TO FACE OF VIEW SHOWN AND AUTOMATICALLY ROUNDED BY COMPUTER FOR INSPECTION (SEE MATH MODEL FOR PRECISE DIMENSIONS). FOR ALL OTHER DIMENSIONS NOT SHOWN BUT REQUIRED FOR TOOL BUILD, SEE MATH MODEL FOR PRECISE TOOL PATH DATA

2. MATERIAL RECYCLING CODE PER ISO 11469. (1.5)X(1) CHARACTERS PA 66 LOCATED ON ANY EXTERIOR SURFACE

3. THIS PRODUCT IS NOT CATEGORIZED AS AN APPEARANCE ITEM, MINOR IMPERFECTIONS INCLUDING, BUT NOT LIMITED TO, FLOW MARKS, COLOR BLEMISHES, GATE VESTIGE, AND SOFT FLASH THAT DO NOT AFFECT THE FIT, FORM, OR FUNCTION OF THE PART ARE PERMISSIBLE PER DPNP-4.7-CS-01

4. REFERENCE MATING COMPONENTS OR EQUIVALENT:

   SEE 13653612(H59001) & 15498846(H59011) ASSEMBLY DRAWINGS

   33299380 ELBOW 90° WIRE DRESS

5. (1.5)X(1) DELPHI CORPORATE BRAND TO BE LOCATED ON ANY EXTERIOR SURFACE, PREFERABLY VISIBLE AT FINAL ASSEMBLY

6. APEX 2.8 3-WAY(3W) MALE AND FEMALE WIRE DRESS COVER

7. INTERCHANGEABLE TOOL FOR 6MM, 9MM AND NO CONDUIT (CDT) OPTIONS

8. EJECTOR PIN NOTES:
   ENGAGEMENT SURFACE FLUSH TO 0.15 MAX RECESSED
   OUTSIDE SURFACE FLUSH TO 0.05 MAX RECESSED
   ALL OTHERS 0.10 MAX RAISED TO 0.25 RECESSED

9. ACCEPTANCE CRITERIA DEVIATIONS:

   35N MIN FOR BACKSHELL LOCKED RETENTION AT WIRE EXIT POINT

   50N MIN FOR CONDUIT TO BACKSHELL RETENTION AND CONNECTOR TO BACKSHELL RETENTION UNDER SIDE LOAD

PART NO	REV	N/P	CONDUIT SIZE mm	CDT CODE	VOLUME CM³
33292354	07	AA	NO CONDUIT	NO CODE	4.199
33267785	07	AA	9(M1889002/M1889012)	9	4.268
33292353	07	AA	6 (M1889001/M1889011)	6	4.317

(11) PROCESS SENSITIVE DIMENSION

DIMENSIONS ENCLOSED IN ( ) INDICATE REFERENCE DIMENSIONS AND NO TOLERANCE LIMITS ARE ESTABLISHED

DIMENSIONAL RANGE (MM)									CHART E1
FROM / TO	> 0 / 20	> 20 / 30	> 30 / 70	> 70 / 100	>100 / 150	>150 / 200	>200 / 250	>250 / 300	>300 / 400
TOLERANCE UNLESS OTHERWISE SPECIFIED	±0.15	±0.2	±0.3	±0.4	±0.5	±0.6	±0.8	±1	±1.2

ANGULAR TOLERANCE ±2°

A LINE DRAWN THROUGH A PART NUMBER INDICATES THAT PHYSICAL PARTS ARE NOT AVAILABLE FOR ORDERING.

PART NUMBERS THAT DO NOT HAVE A LINE PRESENT INDICATE THAT PHYSICAL PARTS ARE AVAILABLE FOR ORDERING.

CONTACT DELPHI SALES TO ASSURE AVAILABILITY OF PARTS.

DWG TYPE: PART DRAWING

STYLE

VOLUME (CM³): SEE CHART

DISTR CODE: D

UNLESS OTHERWISE SPECIFIED

THIS DOCUMENT IS IN ACCORDANCE WITH ASME Y14.5M-1994 AS AMENDED BY THE GM GLOBAL DIMENSIONING AND TOLERANCING ADDENDUM-2001. SEPARATE PATTERNS OF FEATURES MAY BE GAGED SEPARATELY REGARDLESS OF DATUM REFERENCES.

ALL DIMENSIONS ARE IN MILLIMETERS

REFERENCE

THIRD ANGLE PROJECTION

DO NOT SCALE

USE MATH DATA

CAD NX

DELPHI

DELPHI PACKARD ELECTRICAL/ELECTRONIC ARCHITECTURE

Chennai, India

COPYRIGHT 2015 DELPHI CORPORATION AND/OR ITS AFFILIATES.
ALL RIGHTS RESERVED.
REVISED 2017
THIS DRAWING IS THE PROPERTY OF DELPHI CORPORATION AND CONTAINS DELPHI CONFIDENTIAL INFORMATION. THE REPRODUCTION, DISTRIBUTION AND UTILIZATION OF THIS DOCUMENT OR ITS RELATED CAD MATH DATA, AS WELL AS COMMUNICATION OF ANY CONTENT TO OTHERS, WITHOUT EXPRESS AUTHORIZATION, IS PROHIBITED.

		DATE
DR		
APVD1	SAKTHIVEL M	28OC15
APVD2	SAKTHIVEL M	28OC15
APVD3	SUCHA SIAN	28OC15
APVD4		
APVD5		

SUBSTANCES OF CONCERN AND RECYCLED CONTENT PER DELPHI 10949001

MATERIAL: POLYAMIDE COMPOUND BLACK

DRAWING NAME: TAXI COV WIRE DRESS

DRAWING NUMBER: 33299377

SIZE	SCALE	FRAME NO	SHEET NO	STG	REV	N/P
A0	2:1	1 OF 1	1 OF 1	R	11	-