POLECOUNT Polzahl	DELPHI ORDER NO. Bestell-Nr.	Rev.	CODING Kodierung	MATERIAL Material	COLOR Farbe	WEIGHT Gewicht (g)	SUITABLE TO Passend zu
4	~~33329551~~	02	A	PBT - GF10	BLACK	0.7	INTERFACE S1051201
		-	B		-		
		-	C		-		
		-	D		-		
		-	Z		-		
6	33322916	02	A		BLACK	0.9	
	33322918	02	B		WHITE		
		-	C		-		
		-	D		-		
		-	Z		-		
8	33322907	02	A		BLACK	1.0	
	33322911	02	B		WHITE		
		-	C		-		
		-	D		-		
		-	Z		-		
10	33322906	02	A		BLACK	1.2	
	33322914	02	B		WHITE		
		-	C		-		
		-	D		-		
		-	Z		-		
12	~~33329552~~	02	A		BLACK	1.3	
		-	B		-		
		-	C		-		
		-	D		-		
		-	Z		-		
14	33322904	02	A		BLACK	1.5	
	33322905	02	B		WHITE		
		-	C		-		
		-	D		-		
		-	Z		-		
16	~~33329553~~	02	A		BLACK	1.7	
		-	B		-		
		-	C		-		
		-	D		-		
		-	Z		-		
18	~~33329554~~	02	A		BLACK	1.8	
		-	B		-		
		-	C		-		
		-	D		-		
		-	Z		-		
20	33322902	02	A		BLACK	2.0	
	33322903	02	B		WHITE		
		-	C		-		
		-	D		-		
		-	Z		-		
22	33329555	02	A		BLACK	2.2	
		-	B		-		
		-	C		-		
		-	D		-		
		-	Z		-		

8 7

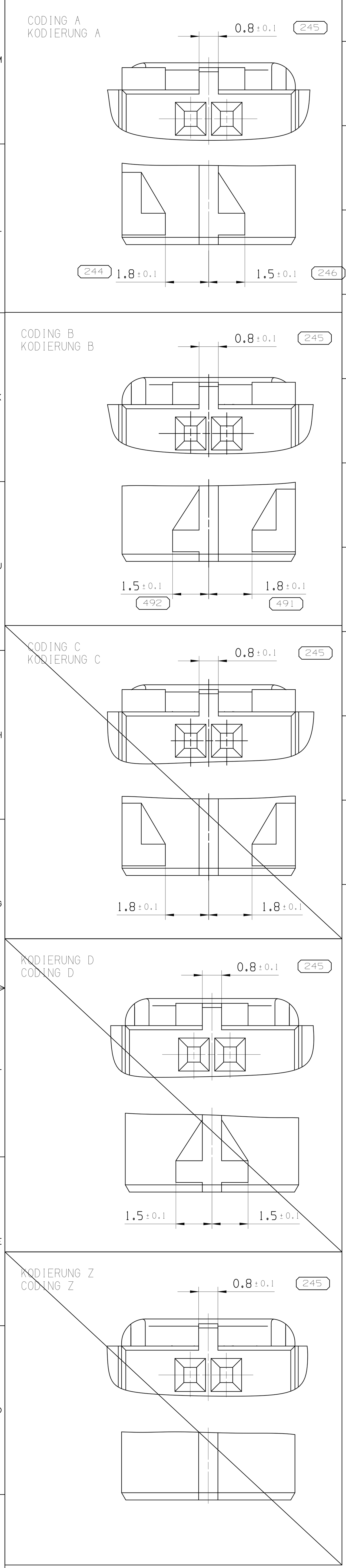

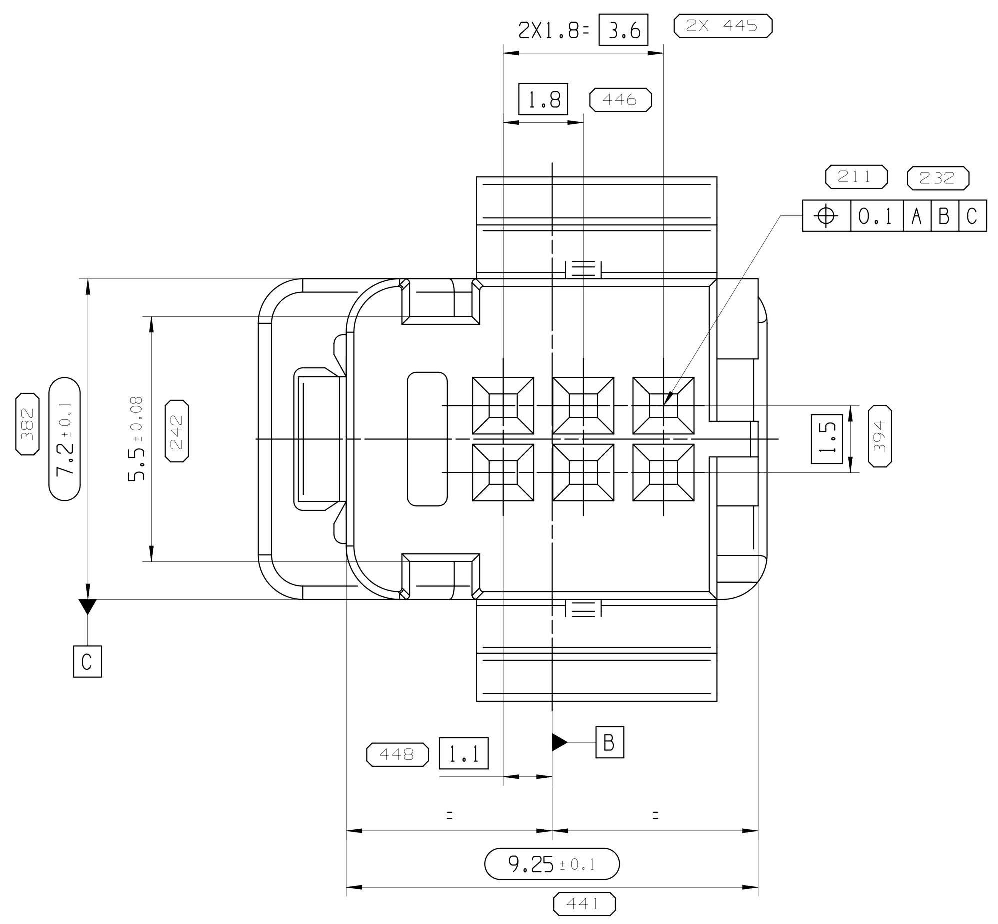

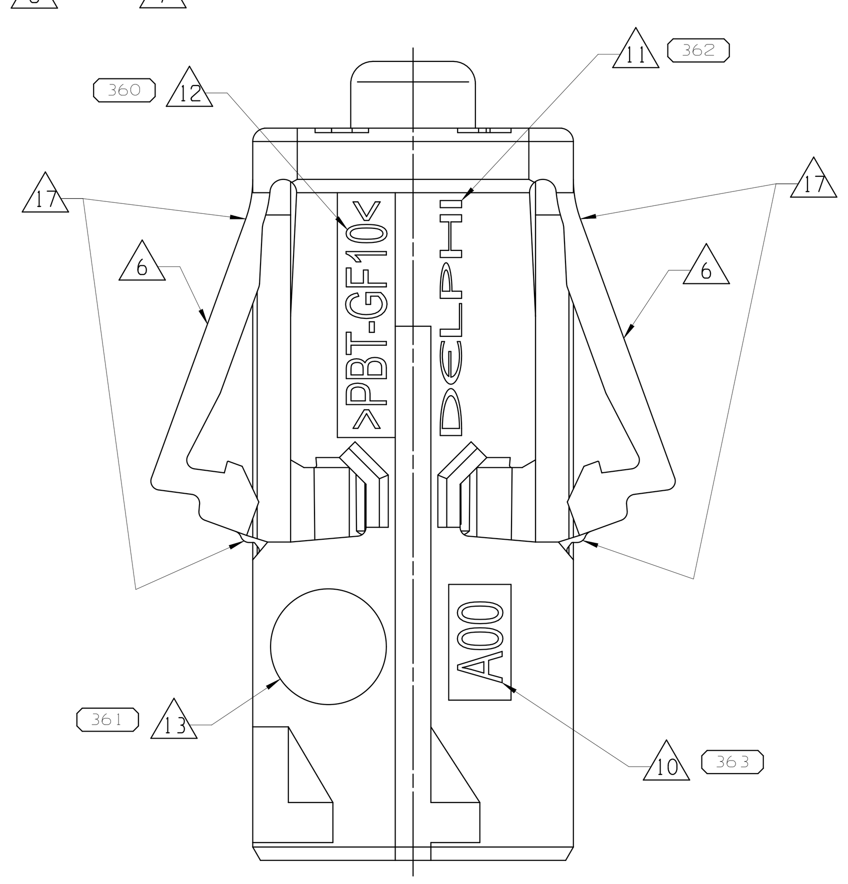

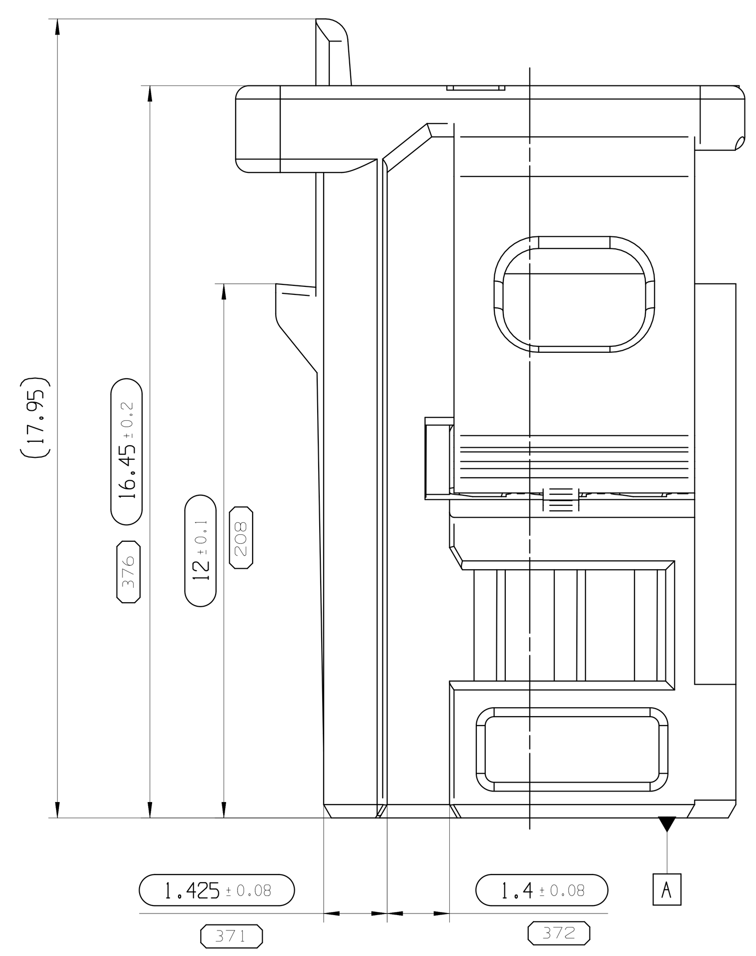

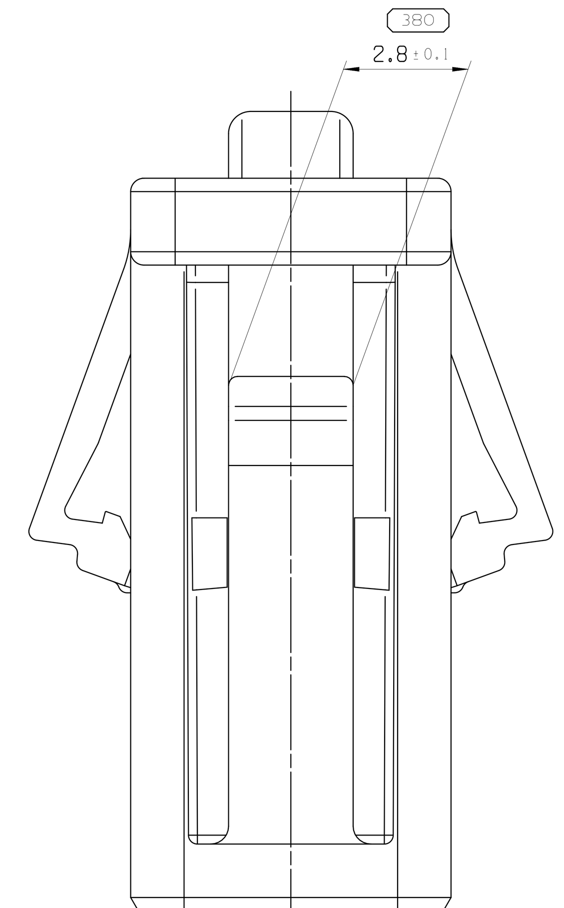

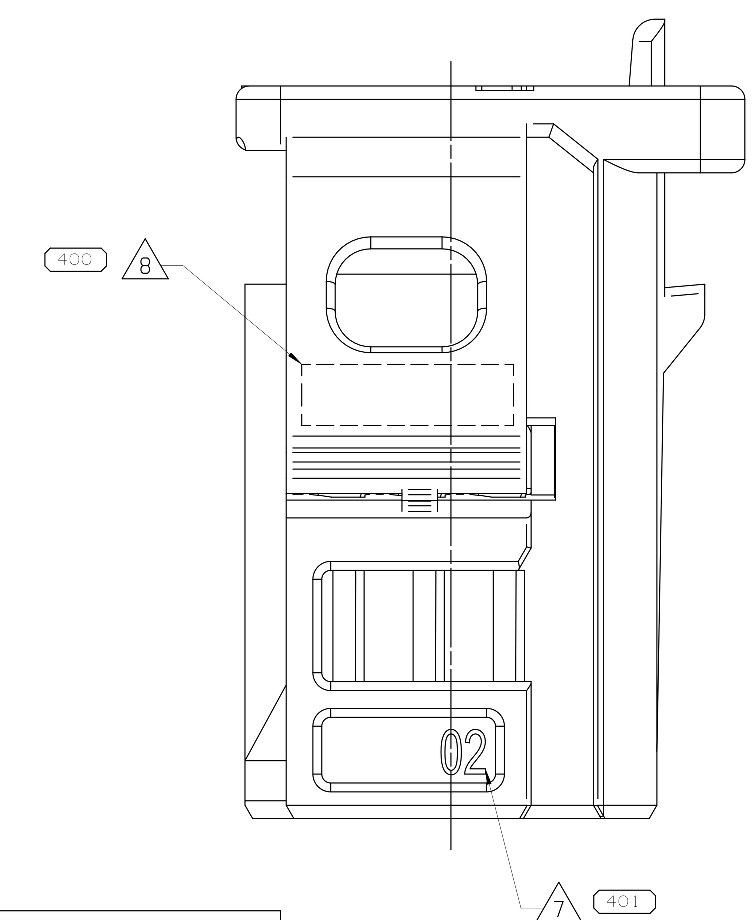

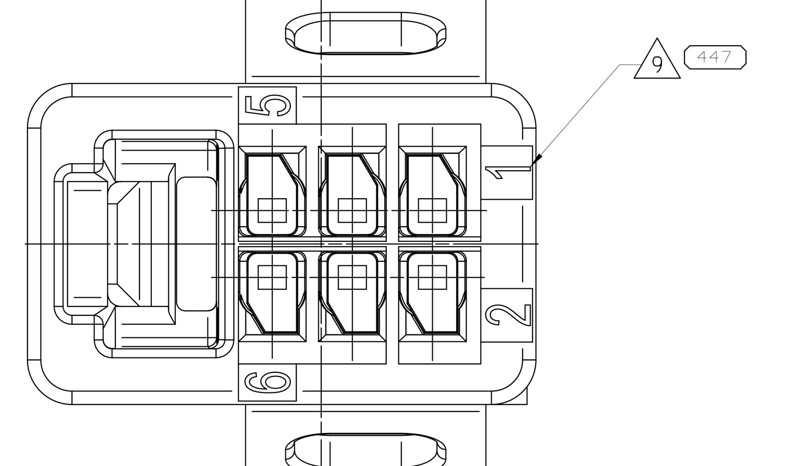

NOTES
Bemerkungen

1 ONLY THE GERMAN LANGUAGE SHALL BE BINDING
Nur der deutsche Text ist bindend

2 MAX. WIRE SIZE RANGE 0.35mm²
max. DGB 0.35mm²

3 PART LINE BURR AND FLASH <0.3mm PERMITTED, IF FUNCTION IS NOT IMPAIRED
Formteilungsgrat und Spritzrat <0.3mm zulaessig, wenn Funktion nicht beeintraechtigt

4 PACKAGING AS LOOSE PIECE
Verpackung als Schuettgut

5 GENERAL TOLERANCE: ISO 8015-DIN EN ISO 291:2008-08 ⌓ 0.3 CZ
Allgemeintoleranz:

6 DELIVERY CONDITION:
SECONDARY LOCKING DEVICE IN PRELOCKING POSITION,
LOCKED POSITION PERMISSIBLE, FURTHER PROCESSING ACCORDING APPLICATION SPECIFICATION
Anlieferzustand:
2. Kontaktsicherung in Vorraststellung,
Endverrastung zulaessig, weitere Verarbeitung nach Anwendungsspezifikation

7 PART REVISION INDEX
Teileaenderungsindex

8 DPN DELPHI PART NO.
DELPHI Teilenummer

9 TERMINAL CAVITY MARK
Kontaktkammermarkierung

10 MOULD CAVITY MARK
Formnestmarkierung

11 DELPHI COMPANY LOGOTYPE
DELPHI Firmenlogo

12 MATERIAL IDENTIFICATION
Materialkennzeichnung

13 DATE CLOCK
Datumsuhr

14 PRODUCT SPECIFICATION PS33266275
Produktspezifikation PS33266275

15 APPLICATION SPECIFICATION AS33266275
Verarbeitungsspezifikation AS33266275

16 6POS. CODING A AS SHOWN
6pol. Kodierung A dargestellt

17 STRESS WHITENING PERMISSIBLE, IF NO NEGATIVE EFFECT ON FUNCTION
Weiszbruch zulaessig, wenn keine negative Auswirkung auf Funktion

DWG STATUS DATE	STG	REV	N/P	CHG	ZONE	REVISION HISTORY	AUTH	DR	APVD 1	APVD 2
30JN16		01				INITIAL RELEASE / ERSTFREIGABE		A.SUM	P.WOH	R.SCH
20DE16	R	02		--	G-M13 G10 A12-14 G-M12 H5-6	MATERIAL PBT-GF10 WAS PBT-GF15 DIMENSION NUMBERING MODIFIED TABLE COMPLEMENTED WITH NANOMQS INTERFACE S1051201 WAS TE-114-94000-20 NOTES 14-17 MODIFIED, COMPLEMENTED DRAWING REPLACED PRO-ENGINEER DRAWING		P.WOH	P.WOH	R.SCH
10NO17	R	02	AA		H14	DPN 33329555 ACTIVATED		M.NIJ	P.WOH	R.SCH
27NO17	R	02	AB		H14	DPN 33329555 MADE INACTIVE		N.SUR	P.WOH	R.SCH
17JN19	R	02	AC		H14	DPN 33329555 ACTIVATED		R.VEN	R.PRA	R.SCH

FOR INFORMATION ONLY:
SECONDARY LOCKING DEVICE IN END-LOCKED POSITION
Nur zur Information:
2. Kontaktsicherung in Endraststellung

10:1

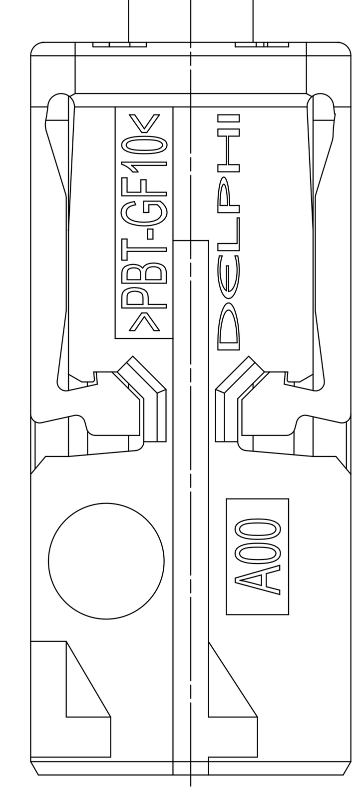

3D VIEW / 3D ANSICHT
SCALE 1:1

SEALING CLASSIFICATION Dichtheitsklasse	NOT WATERPROOFED Nicht wasserdicht
VIBRATION CLASSIFICATION SEVERITY Vibrationsklasse Schaerfegrad	2
TEMPERATURE RANGE Temperaturbereich	-40° ...+105° C
CLASSIFICATION ACC. Klassifizierung gemaess	LV214 14

SUITABLE FEMALE CONTACT Passender Buchsenkontakt	DRAWING-NO. Zeichnungsummer	MAX. WIRE CROSS SECTION max. Leitungsquerschnitt
DELPHI CTS050	33124947	0.35mm² FLRY
TE NANOMQS	13990010	0.35mm² FLRY

AK VERSION

•APTIV•
DELPHI PACKARD ELECTRICAL/ELECTRONIC ARCHITECTURE
Nuremberg, Germany

COPYRIGHT 2016 DELPHI CORPORATION AND/OR ITS AFFILIATES.
ALL RIGHTS RESERVED.
REVISED 2017
THIS DRAWING IS THE PROPERTY OF DELPHI CORPORATION AND CONTAINS DELPHI CONFIDENTIAL INFORMATION. THE REPRODUCTION, DISTRIBUTION AND UTILIZATION OF THIS DOCUMENT OR ITS RELATED CAD MATH DATA, AS WELL AS COMMUNICATION OF ANY CONTENT TO OTHERS, WITHOUT EXPRESS AUTHORIZATION, IS PROHIBITED.

DIESE ZEICHNUNG IST EIGENTUM DER FIRMA DELPHI UND ENTHAELT DELPHI VERTRAULICHE INFORMATIONEN. DIE REPRODUKTION, VERTEILUNG UND NUTZUNG DIESES DOKUMENTES ODER DEREN ZUGEHOERIGEN CAD DATEN, ODER AUCH ALS KOMMUNIKATION VON BELIEBIGEN INHALT ZU ANDEREN, IST OHNE BERECHTIGUNGSPRUEFUNG DURCH DIE DELPHI CORPORATION UNZULAESSIG

DWG TYP: CUSTOMER PART DRAWING
WEIGHT (GR): SEE TABLE
VOLUME (CM³): SEE TABLE
DISTR CODE: D
ROUTING
UNLESS OTHERWISE SPECIFIED
GENERAL TOLERANCES ACCORDING TO: SEE NOTES
GD&T ACCORDING TO: ISO 1101
REFERENCE
FIRST ANGLE PROJECTION
DO NOT SCALE
USE MATH DATA
CAD NX

		DATE
DR	A.SUMAN	15MR16
APVD1	P.WOHLFAHRT	30JN16
APVD2	R.SCHMIDT	30JN16
APVD3		
APVD4		
APVD5		

~~SUBSTANCES OF CONCERN AND RECYCLED CONTENT PER APTIV 10949001~~
~~POTENTIELL GEFAEHRLICHE STOFFE UND REZYKLATANTEIL GEMAESS DELPHI 10949001~~

MATERIAL: SEE TABLE

DRAWING NAME: 2 ROW FEMALE HOUSING, AK
0.5mm NWP CONNECTOR FAMILY

DRAWING NUMBER: 33266275

SIZE	SCALE	FRAME NO	SHEET NO	STG	REV	N/P
A0	10:1	1 OF 1	1 OF 1	R	02	AC

CONTROLLED DOCUMENTS ARE ONLY AVAILABLE ON THE SERVER

User: pz4pl6
Part: 33266275-CUS03-S01/02AC
pz4pl6,06172019,08:56,fail,cus
Date: 17-Jun-19 Time: 12:27:29