STRAP MOUNTING

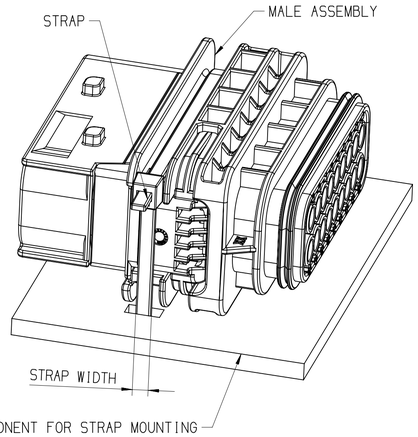

REMARK:
- MAX STRAP WIDTH 4.8MM

COMPONENT FOR STRAP MOUNTING

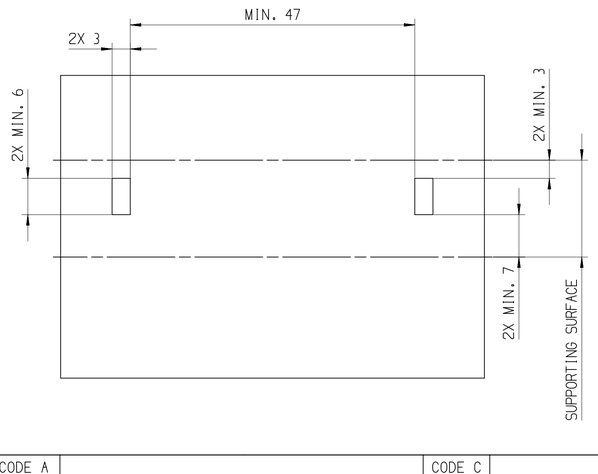

POSITION	1								2		3
NAME	HOUSING STRAP MOUNT								SECONDARY LOCK		SL SEAL
MATERIAL	PBT GF30 FR17				PBT GF30				PBT GF30 FR17	PBT GF30	LSR 50 SHORE
COLOR:	BLACK	GREY	GREEN	BLUE	BLACK	GREY	GREEN	BLUE	ORANGE	YELLOW	REDDISH-BROWN
PART-NO.:	33325407	33325405	33325404	33325406	33347473	33348040	33348048	33348054	33325395	33347487	33283927

ASSEMBLY-NO.:	PART-REV	CODING	MATERIAL/ WEIGHT	PART-NO.:											
33342234	01	CODE A	ALL PARTS VO / 32,4	-	---	---	---	---	---	---	---	---	---	---	---
33342245	01	CODE B		-	1	---	---	---	---	---	---	---	1	---	1
33342250	01	CODE C		-	---	1	---	---	---	---	---	---	1	---	1
33342261	01	CODE D		-	---	---	1	---		---	---	---	1	---	1
~~33347874~~	01	CODE A	ALL PARTS NVO / 31,4	-	---	---	---	---	---	---	---	---	1	---	1
~~33349707~~	01	CODE B		-	---	---	---	---	---	---	---	---	---	1	1
~~33349711~~	01	CODE C		-	---	---	---	---	---	---	---	---	---	1	1
~~33349712~~	01	CODE D		-	---	---	---	---	---	---	---	---	---	1	1

1

DWG STATUS					ZONE	REVISION HISTORY	AUTH	DR	APVD 1	APVD 2
DATE	STG	REV	N/P	CHG						
28N018	R	01				INITIAL RELEASE		A.RAJ	P.NAJ	M.GRU
15NR19	R	01	AA		B6	REFERENCE HELLERMANN TYTON DWG-NO. ADDED		K.FAR	M.GRU	K.PIT
270C20	R	01	AB		B6 G9 B6	PROTECTION CAP APTIV DWG-NO.: 35462944 WAS 35274879 PART AVAILABILITY FOR PART NUMBERS 33347874, 33349707, 33349711, 33349712 UPDATED NOTES UPDATED		P.NAJ	M.GRU	M.SKR

A-A

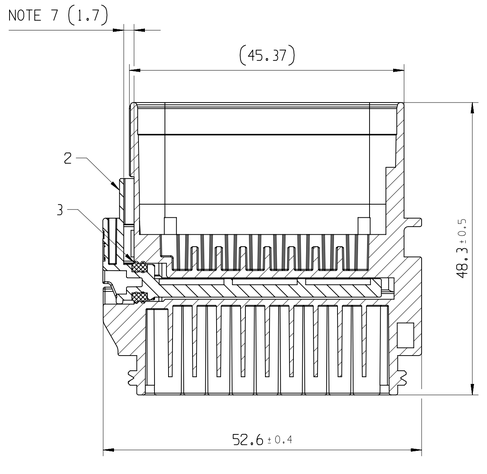

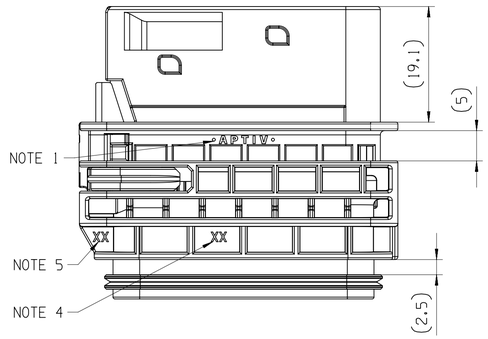

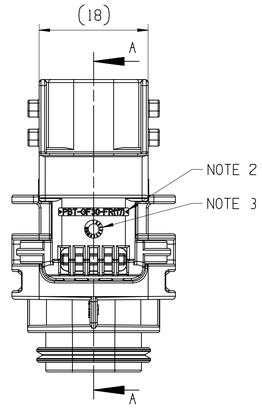

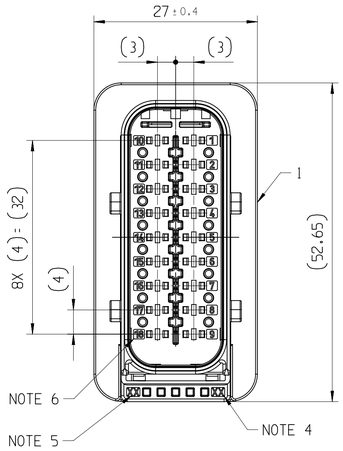

SCALE:
1 : 1

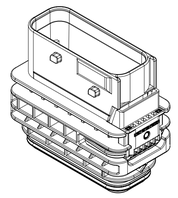

CODE A

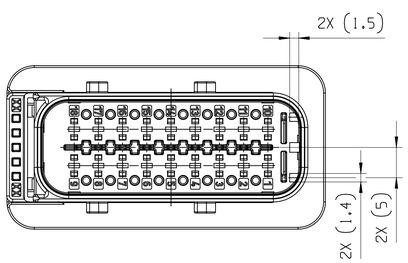

CODE C

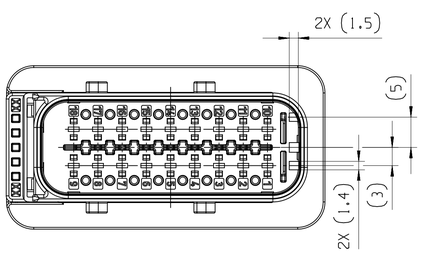

CODE B

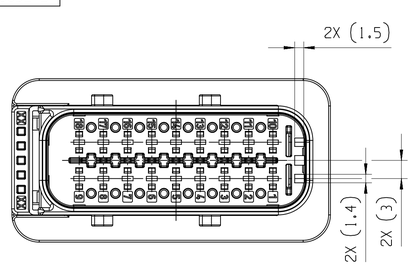

CODE D

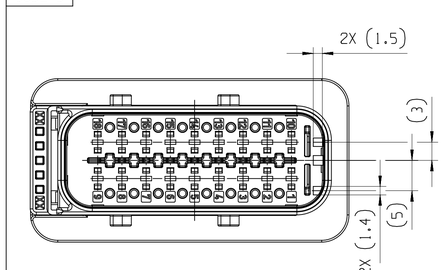

	NOTES
-	ON MAIN VIEW ASSEMBLY 33342234 SHOWN (CODE A)
-	DELIVERED CONDITION AS ON MAIN VIEWS - SECONDARY LOCK IN OPEN POSITION
-	ASSEMBLY INSTRUCTION NO.: 35269104-CUS71 - PRELIMINARY ASSEMBLY 35269104-CUS72 - HARNESS ASSEMBLY 35269103-CUS73 - CAR ASSEMBLY
-	MATING PARTS: - 18 WAY 1.5 FEMALE CONNECTOR ASM DWG-NO.: 35195559 - BACKSHELL 90 DEG APTIV DWG-NO.: 35024552 (HT DWG-NO.: 17-2277-001-CSG) - BACKSHELL 180 DEG APTIV DWG-NO.: 35024553 (HT DWG-NO.: 17-1491-001-CSG) - PROTECTION CAP APTIV DWG-NO.: 35462944 (HT DWG-NO.: 17-2273-001-CSG) 1
-	MATING TERMINAL SYSTEM: - 1.5 TERMINAL DWG-NO.: 15396739 MAX WIRE CROSS SECTION: 1.0MM² RECOMMENDATION FOR 1.5 TERMINAL WITH WIRE CROSS SECTION 1.5MM² - USE COMBINATION: TE TERMINAL: TAB 1.6, DWG NO.: 1703278-5 SEAL: 2112323-1 MAX INSULATION CRIMP DIMENSIONS: HEIGHT: 3.40; WIDTH: 3.40 1
1	APTIV LOGO
2	MATERIAL NAME ACCORDING TO VDA 260
3	DATE INSERT
4	TOOL CAVITY NUMBER
5	INDEX REPLACEMENT INSERT
6	PART CAVITY NUMBER
7	MOVING DISTANCE OF SECONDARY LOCK

A LINE DRAWN THROUGH A PART NUMBER INDICATES THAT PHYSICAL PARTS ARE NOT AVAILABLE FOR ORDERING.

PART NUMBERS THAT DO NOT HAVE A LINE PRESENT INDICATE THAT PHYSICAL PARTS ARE AVAILABLE FOR ORDERING.

CONTACT APTIV SALES TO ASSURE AVAILABILITY OF PARTS.

R 0.1 MAX
R 0.2 MAX
SHARP CORNER TOLERANCE

DIM TO CHECK / ( ) DIM FOR HELP / THEORETIC DIM	DIMENSIONAL RANGE (MM) FROM TO	> 0 20	> 20 30	> 30 70	> 70 100	>100 150	>150 200	>200 250	>250 300	>300 400
	TOLERANCE UNLESS OTHERWISE SPECIFIED	±0.15	±0.2	±0.3	±0.4	±0.5	±0.6	±0.8	±1	±1.2
	ANGULAR TOLERANCE ±2°									

DWG TYP
PART DRAWING

WEIGHT (GR)	DISTR CODE
SEE CHART	D
VOLUME (CM³) ---	
ROUTING	

UNLESS OTHERWISE SPECIFIED

GENERAL TOLERANCES ACCORDING TO:

SEE CHART

GD&T ACCORDING TO:

ISO 1101

REFERENCE

FIRST ANGLE PROJECTION

DO NOT SCALE

USE MATH DATA

CAD NX

•APTIV•

CONNECTION SYSTEMS
KRAKOW, POLAND

COPYRIGHT 2018 APTIV. ALL RIGHTS RESERVED.

THIS DRAWING IS THE PROPERTY OF APTIV AND CONTAINS APTIV CONFIDENTIAL INFORMATION. THE REPRODUCTION, DISTRIBUTION AND UTILIZATION OF THIS DOCUMENT OR ITS RELATED CAD MATH DATA, AS WELL AS COMMUNICATION OF ANY CONTENT TO OTHERS, WITHOUT EXPRESS AUTHORIZATION, IS PROHIBITED.

TEN RYSUNEK JEST WŁASNOŚCIĄ APTIV I ZAWIERA POUFNE INFORMACJE POWIELANIE, ROZPOWSZECHNIANIE I WYKORZYSTYWANIE TEGO DOKUMENTU LUB ZWIĄZANYCH Z NIM DANYCH CAD, JAK RÓWNIEŻ PRZEKAZYWANIE INNYM JAKIEJKOLWIEK ICH ZAWARTOŚCI, BEZ NADANIA WYRAŹNYCH UPRAWNIEŃ, JEST ZABRONIONE

		DATE
DR	A.RAJEEV	27N018
APVD1	P.NAJDUCH	28N018
APVD2	M.GRUDZEWSKI	29N018
APVD3		
APVD4		
APVD5		

SUBSTANCES OF CONCERN AND RECYCLED CONTENT PER APTIV 10949001
SUBSTANCJE NIEBEZPIECZNE I POWTORNIE PRZETWORZONE OKREŚLA APTIV 10949001

MATERIAL
SEE CHART

DRAWING NAME
18 WAY 1.5
CTCS STRAP MOUNT MALE ASSEMBLY

DRAWING NUMBER
35195558

SIZE	SCALE	FRAME NO	SHEET NO	STG	REV	N/P
A1	2:1	1 OF 1	1 OF 1	R	01	AB

User: 5E08xx
Dwg: 35195558-CUS01-S01.01AB Date: 29-pa 20 Time: 15:25:20
Scgwx:102020201:15:24:122pdes.pnc