SYMBOL DEFINITION		
A DIMENSION WITHOUT AN INSPECTION REPORT SYMBOL [ ] DOES NOT REQUIRE INSPECTION. IT MAY BE CONTROLLED ON THE INDIVIDUAL COMPONENT DRAWING.	TOTAL NO OF INSPECTIONS REQUIRED	21
	LAST NO. USED	16

MISSING SYMBOLS

NO MISSING SYMBOL NUMBER

DWG STATUS					ZONE	REVISION HISTORY	AUTH	DR	KP/DATE 1	KP/DATE 2
DATE	STG	REV	KP	CHG						
08.1.02	R	09	-	-	-	MAT'L SPEC WAS PR0067547 PA6 BLK	2276499	JH	EDV	JH
1-04.07	R	09	AA	-	-	ADDED APPLICATION DATA NOTE AND REMOVED WAITING COMP & ACCEPTED COMP INFORMATION.	4029909	MM	MM	BDG

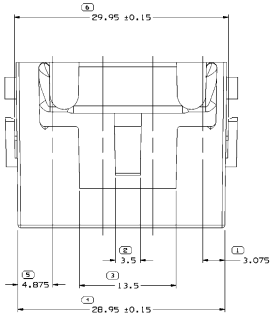

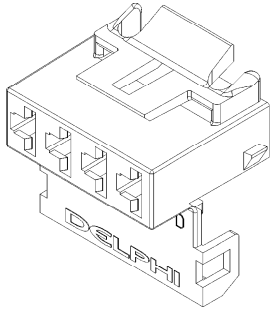

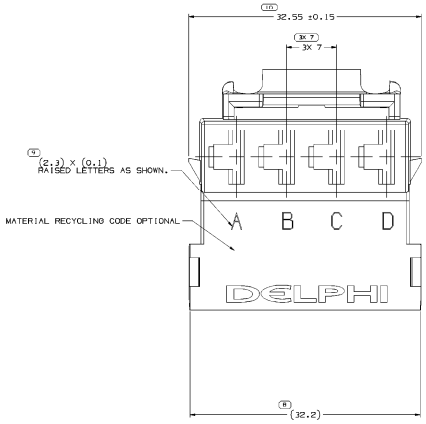

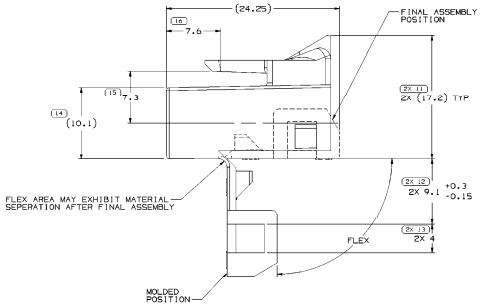

NOTES

1. UNLESS OTHERWISE SPECIFIED AND/OR INDICATED:
   DIMENSIONS ARE TO FACE OF VIEW SHOWN AND AUTOMATICALLY ROUNDED BY COMPUTER FOR INSPECTION (SEE MATH MODEL FOR PRECISE DIMENSIONS). FOR ALL OTHER DIMENSIONS NOT SHOWN BUT REQUIRED FOR TOOL BUILD, SEE MATH MODEL FOR PRECISE TOOL PATH DATA.
2. THIS PART IS NOT CONTROLLED FOR AUTOMATIC FEEDING.
3. (2.3)X(0.1) RAISED DELPHI CORPORATE BRAND TO BE LOCATED ON ANY EXTERIOR SURFACE, PREFERABLY VISIBLE AT FINAL ASSEMBLY. OPTIONAL CONSTRUCTION TO BE "PED" OR NO LOGO.
4. FOR APPLICATION DATA SEE THE APPLICATION DRAWING.

DIMENSIONS FROM	MM									
FROM	> 0	> 30	> 50	> 70	> 100	> 150	> 200	> 250	> 300	
TO	30	50	70	100	150	200	250	300	400	
TOLERANCE	±0.25	±0.3	±0.4	±0.5	±0.6	±0.8	±1	±1.2		

ANGULAR TOLERANCE ±2°

PROCESS GEOMETRIC DIMENSIONS

DIMENSIONS DESIGNED TO A 1 INDICATE MATERIAL CONDITION AND AND ARE TOLERANCED ACCORDINGLY

ALL DIMENSIONS ARE IN MILLIMETERS

RETAINED

THIRD ANGLE PROJECTION

DO NOT SCALE

USE MATH DATA

NX

PART DRAWING

VOLUME (CM³) 4.293

SYSTEM SIZE D

UNLESS OTHERWISE SPECIFIED

THIS DOCUMENT IS THE PROPERTY OF DELPHI (DPHI) AND CONTAINS INFORMATION THAT IS PROPRIETARY TO DPHI. IT IS LOANED TO YOU AS THE RECIPIENT FOR YOUR INFORMATION ONLY. IT MUST BE RETURNED UPON REQUEST. YOU MAY NOT COPY, REPRODUCE, DISTRIBUTE, DISCLOSE OR USE THE INFORMATION CONTAINED IN THIS DOCUMENT FOR ANY PURPOSE OTHER THAN THE PURPOSE FOR WHICH IT WAS LOANED. ALL RIGHTS, TITLE AND INTEREST IN AND TO THIS DOCUMENT, INCLUDING ALL INTELLECTUAL PROPERTY RIGHTS, ARE RESERVED BY DPHI. UNPUBLISHED - ALL RIGHTS RESERVED UNDER THE COPYRIGHT LAWS OF THE UNITED STATES.

DELPHI

DELPHI PACKARD ELECTRICAL/ELECTRONIC ARCHITECTURE
WARREN, OH

	DATE
DR: A.M. SPIEGAK	17DEC00
APPR: E. DECKER	17DEC00
APPR: F. MLAKAR	17DEC00
APPR	
APPR	

MATERIAL: POLYAMIDE COMPOUND BLACK

DRAWING NAME: CONN 4 F W/P 630 BLK

DRAWING NUMBER: 12015664

SIZE	SCALE	FORMAT NO	SHEET NO	TOTAL	REV	K/P
A0	5:1	1 OF 1	1 OF 1	1	R	09 AA