STRAP MOUNTING

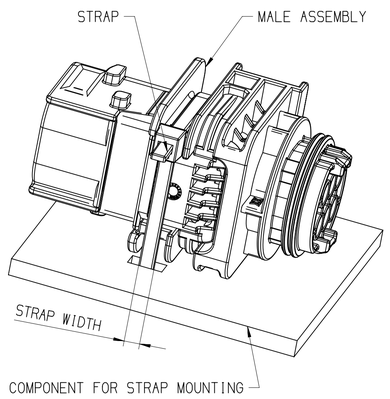

REMARK:
- MAX STRAP WIDTH 4.8MM

COMPONENT FOR STRAP MOUNTING

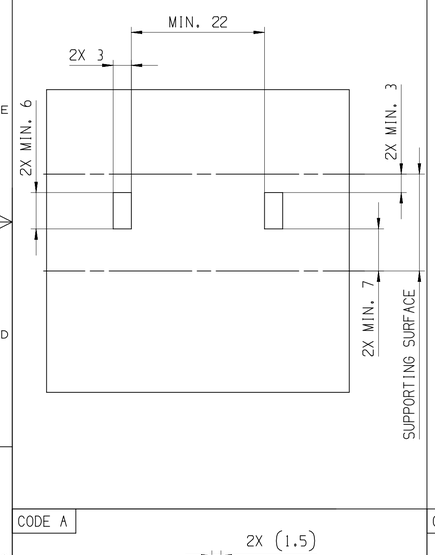

POSITION	1								2		3
NAME	HOUSING STRAP MOUNT								SECONDARY LOCK		SL SEAL
MATERIAL	PBT GF30 FR17				PBT GF30				PBT GF30 FR17	PBT GF30	LSR 50 SHORE
COLOR:	BLACK	GRAY	GREEN	BLUE	BLACK	GRAY	GREEN	BLUE	ORANGE	YELLOW	REDDISH-BROWN
PART-NO.:	33308721	33308720	33308627	33308628	33347363	33347310	33347312	33347315	33308635	33347324	33283927

ASSEMBLY-NO.:	PART-REV	CODING	MATERIAL/WEIGHT	PART-NO.:	1 BLACK	1 GRAY	1 GREEN	1 BLUE	1 BLACK	1 GRAY	1 GREEN	1 BLUE	2 ORANGE	2 YELLOW	3 REDDISH-BROWN
33308912	01	CODE A	ALL PARTS VO / 16,7	-	---	---	---	---	---	---	---	---	1	---	1
33308913	01	CODE B		-	---	1	---	---	---	---	---	---	1	---	1
33308914	01	CODE C		-	---	---	1	---	---	---	---	---	1	---	1
33308915	01	CODE D		-	---	---	---	1	---	---	---	---	1	---	1
~~33347886~~	01	CODE A	ALL PARTS NVO / 16,2	-	---	---	---	---	1	---	---	---	---	1	1
~~33347887~~	01	CODE B		-	---	---	---	---	---	1	---	---	---	1	1
~~33347888~~	01	CODE C		-	---	---	---	---	---	---	1	---	---	1	1
~~33347889~~	01	CODE D		-	---	---	---	---	---	---	---	1	---	1	1

①

DWG STATUS DATE	STG	REV	N/P	CHG	ZONE	REVISION HISTORY	AUTH	DR	APVD 1	APVD 2
250C18	R	01				INITIAL RELEASE		P.NAJ	M.ZYR	M.GRU
29MR19	R	01	AA		B7 A7	REFERENCE HELLERMANN TYTON DWG-NO. ADDED CLIP REFERENCE CHANGED		K.FAR	M.GRU	K.PIT
280C20	R	01	AB		B7 G10 B7 C7	PROTECTION CAP APTIV DWG-NO.: 35391874 WAS 35274875 PART AVAILABILITY FOR PART NUMBERS 33347886, 33347887, 33347888, 33347889 UPDATED NOTES UPDATED HT DWG-NO: 18-0195-001-CSG WAS 17-0195-001-CSG		P.NAJ	M.GRU	M.SKR

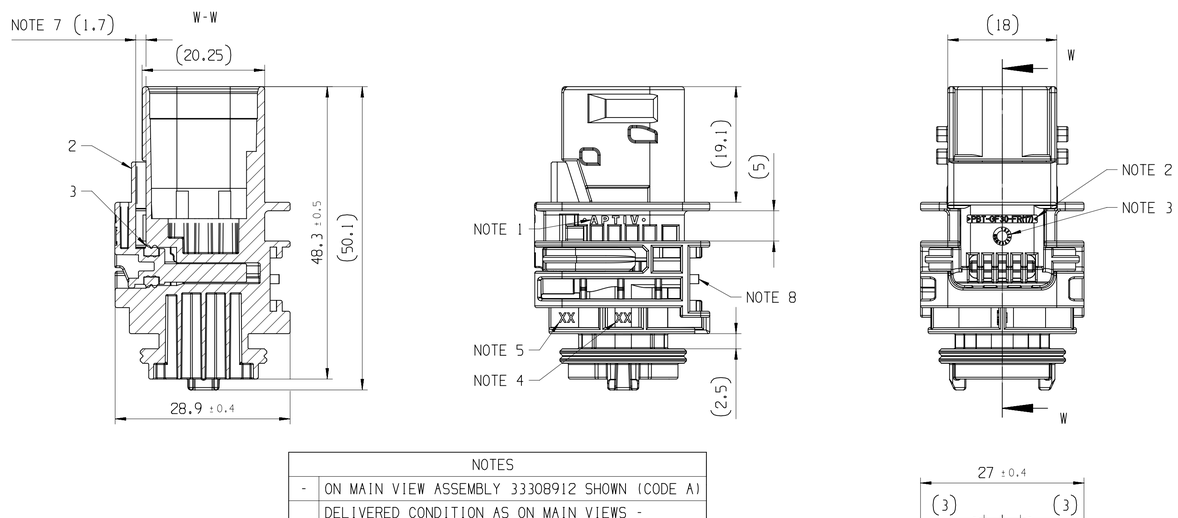

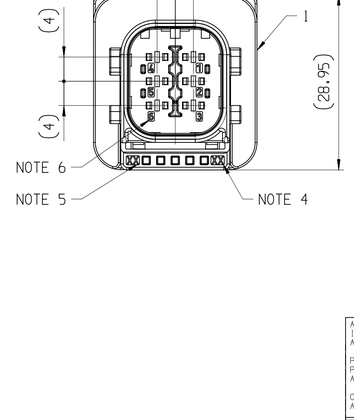

CODE A

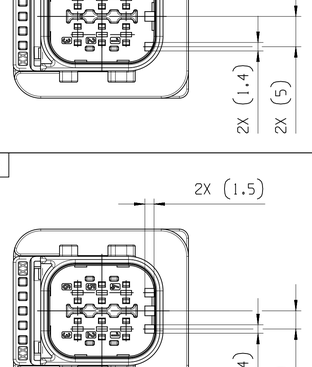

CODE C

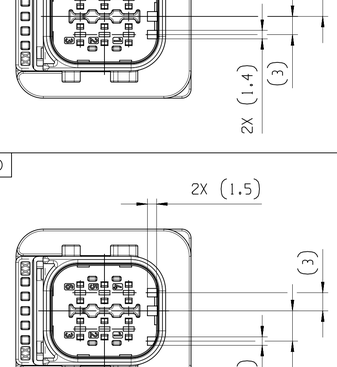

CODE B

CODE D

NOTES

-	ON MAIN VIEW ASSEMBLY 33308912 SHOWN (CODE A)
-	DELIVERED CONDITION AS ON MAIN VIEWS - SECONDARY LOCK IN OPEN POSITION
-	ASSEMBLY INSTRUCTION NO.: 35269104-CUS71 - PRELIMINARY ASSEMBLY 35269104-CUS72 - HARNESS ASSEMBLY 35269103-CUS73 - CAR ASSEMBLY
-	MATING PARTS: - 6 WAY 1.5 FEMALE CONNECTOR ASM DWG-NO.: 35096047 - BACKSHELL 90 DEG APTIV DWG-NO.: 35024558 ① (HT DWG-NO.: 18-0195-001-CSG) - BACKSHELL 180 DEG APTIV DWG-NO.: 35024559 (HT DWG-NO.: 17-0598-001-CSG) - PROTECTION CAP APTIV DWG-NO.: 35391874 ① (HT DWG-NO.: 17-2270-001-CSG)
-	MATING TERMINAL SYSTEM: - 1.5 TERMINAL DWG-NO.: 15396739 MAX WIRE CROSS SECTION: 1.0MM² RECOMMENDATION FOR 1.5 TERMINAL WITH WIRE CROSS SECTION 1.5MM² - USE COMBINATION: TE TERMINAL: TAB 1.6, DWG NO.: 1703278-5 SEAL: 2112323-1 MAX INSULATION CRIMP DIMENSIONS: ① HEIGHT: 3.40; WIDTH: 3.40
1	APTIV LOGO
2	MATERIAL NAME ACCORDING TO VDA 260
3	DATE INSERT
4	TOOL CAVITY NUMBER
5	INDEX REPLACEMENT INSERT
6	PART CAVITY NUMBER
7	MOVING DISTANCE OF SECONDARY LOCK
8	INTERFACE FOR CLIP MOUNTING HT CLIP NUMBER: ① YCCSFT6.5PT0.8-2.5; FT6LG.M.St.Aufn.II

A ——— LINE DRAWN THROUGH A PART NUMBER INDICATES THAT PHYSICAL PARTS ARE NOT AVAILABLE FOR ORDERING.

PART NUMBERS THAT DO NOT HAVE A LINE PRESENT INDICATE THAT PHYSICAL PARTS ARE AVAILABLE FOR ORDERING.

CONTACT APTIV SALES TO ASSURE AVAILABILITY OF PARTS.

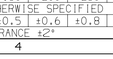

SHARP CORNER TOLERANCE

	DIMENSIONAL RANGE (MM) FROM TO	>0 20	>20 30	>30 70	>70 100	>100 150	>150 200	>200 250	>250 300	>300 400
DIM TO CHECK	TOLERANCE UNLESS OTHERWISE SPECIFIED	±0.15	±0.2	±0.3	±0.4	±0.5	±0.6	±0.8	±1	±1.2
( ) DIM FOR HELP	ANGULAR TOLERANCE ±2°									
THEORETIC DIM										

SCALE: 1:1

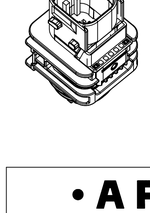

DWG TYP: PART DRAWING

WEIGHT (GR): SEE CHART

VOLUME (CM³): ---

ROUTING

DISTR CODE: D

UNLESS OTHERWISE SPECIFIED

GENERAL TOLERANCES ACCORDING TO: SEE CHART

GD&T ACCORDING TO: ISO 1101

REFERENCE

FIRST ANGLE PROJECTION

DO NOT SCALE

USE MATH DATA

CAD NX

•APTIV•

CONNECTION SYSTEMS
KRAKOW, POLAND

COPYRIGHT 2018 APTIV. ALL RIGHTS RESERVED.

THIS DRAWING IS THE PROPERTY OF APTIV AND CONTAINS APTIV CONFIDENTIAL INFORMATION. THE REPRODUCTION, DISTRIBUTION AND UTILIZATION OF THIS DOCUMENT OR ITS RELATED CAD MATH DATA, AS WELL AS COMMUNICATION OF ANY CONTENT TO OTHERS, WITHOUT EXPRESS AUTHORIZATION, IS PROHIBITED.

TEN RYSUNEK JEST WŁASNOŚCIĄ APTIV I ZAWIERA POUFNE INFORMACJE. POWIELANIE, ROZPOWSZECHNIANIE I WYKORZYSTYWANIE TEGO DOKUMENTU LUB ZWIĄZANYCH Z NIM DANYCH CAD, JAK RÓWNIEŻ PRZEKAZYWANIE INNYM JAKIEJKOLWIEK ICH ZAWARTOŚCI BEZ NADANIA WYRAŹNYCH UPRAWNIEŃ, JEST ZABRONIONE

		DATE
DR	P.NAJDUCH	240C18
APVD1	M.ZYROMSKI	250C18
APVD2	M.GRUDZEWSKI	260C18
APVD3		
APVD4		
APVD5		

SUBSTANCES OF CONCERN AND RECYCLED CONTENT PER APTIV 1094900I
SUBSTANCJE NIEBEZPIECZNE I POWTORNIE PRZETWORZONE OKREŚLA APTIV 1094900I

MATERIAL: SEE CHART

DRAWING NAME: 6 WAY 1.5 CTCS STRAP MOUNT MALE ASSEMBLY

DRAWING NUMBER: 35096187

SIZE	SCALE	FRAME NO	SHEET NO	STG	REV	N/P
A1	2:1	1 OF 1	1 OF 1	R	01	AB

CONTROLLED DOCUMENTS ARE ONLY AVAILABLE ON THE SERVER

User: SZCZAK
Dwg: 35096187-CUS01-S01/01AB Date: 30-pź-20 Time: 15:31:16
czcgwx:10302020,15:30:59?pass.pgc