PACKARD ELECTRIC DIVISION
GENERAL MOTORS CORPORATION
WARREN, OHIO

D

DO NOT SCALE

THIS DRAWING AND DESIGN HEREON CONSTITUTES A PROPRIETARY DESIGN OF PACKARD ELECTRIC DIVISION AND IS NOT TO BE DUPLICATED OR REPRODUCED WITHOUT AUTHORITY OF PACKARD ELECTRIC DIVISION.

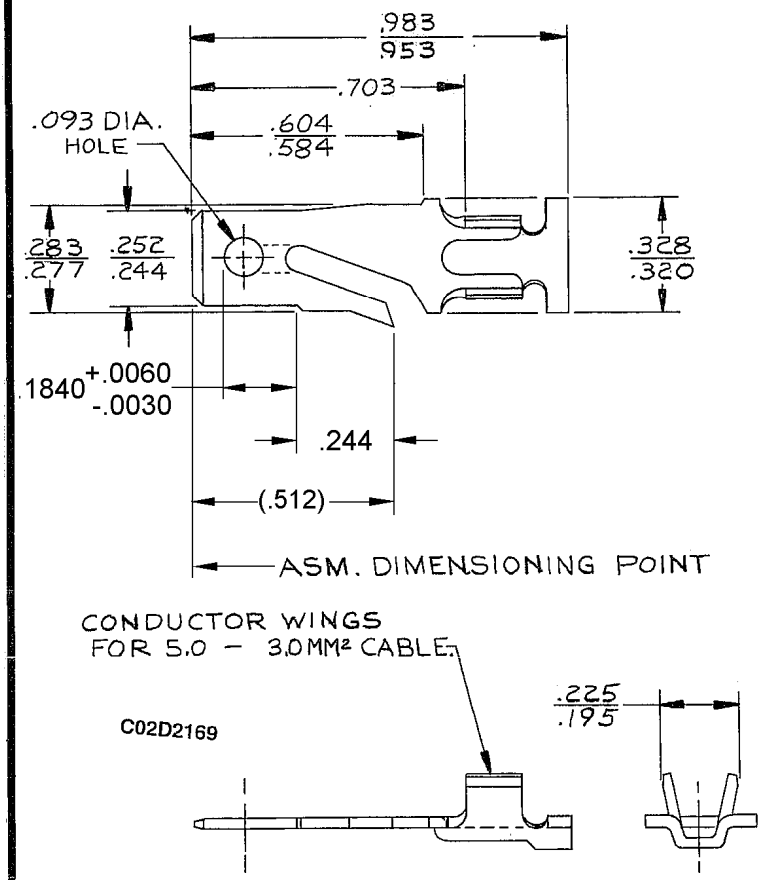

NOTE – MAX. CONTINUOUS CURRENT CARRYING CAPACITY 10GA. 43AMPS. – 12 GA. 33AMPS. (CRIMP & SWEAT APPLICATION).

PART NO. 1201 5878

DATE	SYM.	REVISION RECORD	C/N NO.	DR.	CK.
09JN80	A	RELEASED	80005	H.H	MP
01SE82	–	PICTURE REVISED	82155	T.W.	JM
01AU83	B	REV. SYM. ADVANCED	86126	MS	JM
28AP97	–	REVISED	177598	GL	GL
05DE05	B7	ADDED DIM .1840 +.0060 / -.0030,			
		DIM .512 & REMOVED DIM (1 PLC)	274727	GPS	JVM
23JL08	B8	(.512) WAS .512	405418	MDH	FRG
09FE10	B9	MAT'L SPEC WAS M1403262	409990	ECB	RRR

CODE NO. 6900

QC

TOLERANCE UNLESS OTHERWISE SPECIFIED
DECIMAL:
TWO PLACE ± .01
THREE PLACE ± .005

DWG. DATE 09JN80 | SCALE NONE | DR. H. Hoke 09JN. 80

EST. NO. | CK. W. Pearce | DATE 14JN80

REFERENCE NO. 2962864 "D" SIZE SHT. 3 | APPR. K.M. Kollin | DATE 14JN80

APPR. | DATE

MATERIAL SPEC.
M1573262 METL NONFERROUS C26000 1/2 HD

NAME TERMINAL-MALE-56 SERIES

PART NO. 1201 5878
OUTLINE DRAWING

SIZE A

PACKARD ELECTRIC