D THIS DRAWING AND DESIGN HEREON CONSTITUTES A PROPRIETARY DESIGN OF PACKARD ELECTRIC DIVISION AND IS NOT TO BE DUPLICATED OR REPRODUCED WITHOUT AUTHORITY OF PACKARD ELECTRIC DIVISION.

DO NOT SCALE

PACKARD ELECTRIC DIVISION
GENERAL MOTORS CORPORATION
WARREN, OHIO

PART NO. 1208 4494

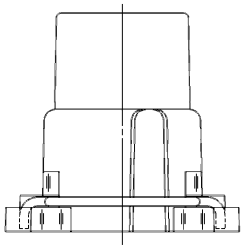

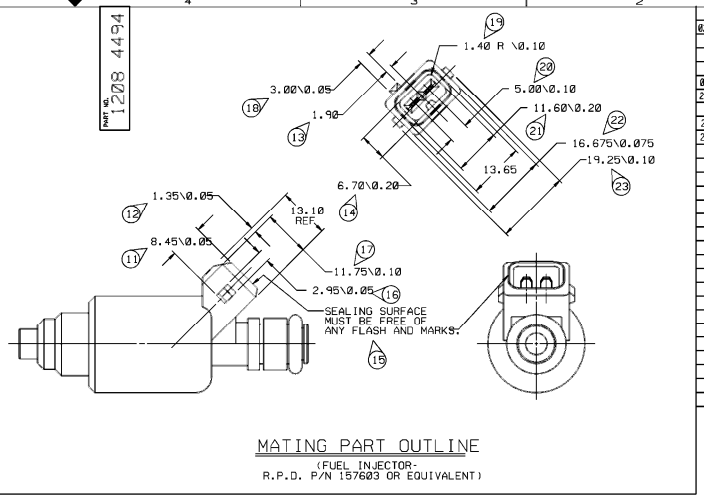

MATING PART OUTLINE
(FUEL INJECTOR-
R.P.D. P/N 157603 OR EQUIVALENT)

DATE	SYM	REVISION RECORD	AUTHORITY	DR	CK
02NOV88	—	12065883-REDRAWN FROM SEPARATE			
		"D" SIZE, WITH NO PHYSICAL CHANGE			
		THUR REV "C"; CABLE SEAL NOTE			
		REVISED	122930	JN	JN
02NOV88	—	12084432-RELEASED TO REV "A"	880005	JN	JN
27OCT90	—	CONN SEAL WAS 12057214 - ALL			
		PARTS - REV LEVEL ADVANCED	138255	WLS	ATL
20MAY91	—	12065883 & 12084432 OBSOLETE	910003	TS	
20MAY91	—	12129141 & 12129143 RELEASED TO REV	A910005	TS	

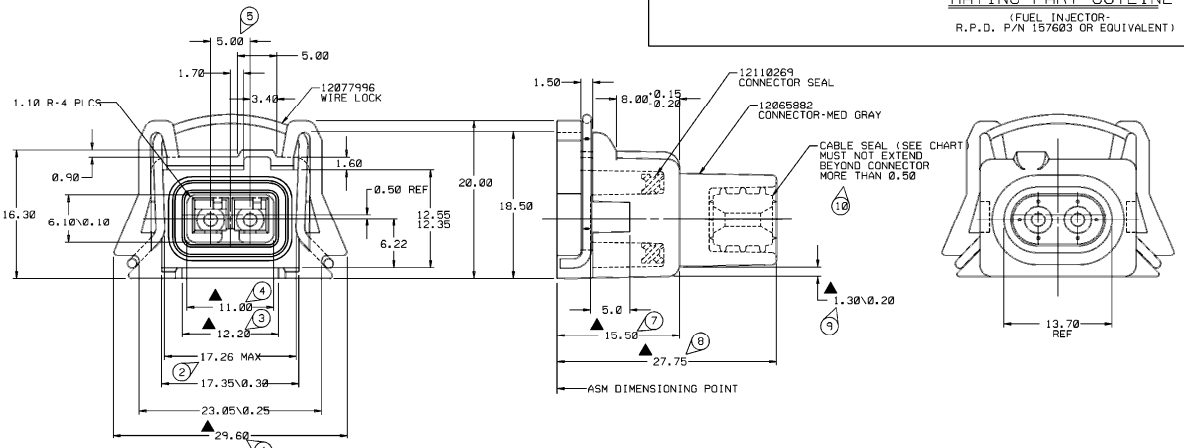

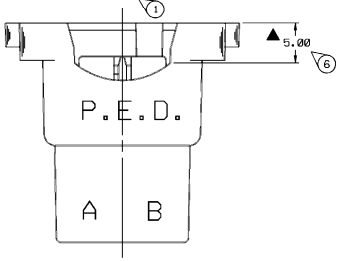

NOTES — 1. DIMENSIONS ARE TO FACE OF VIEW SHOWN, UNLESS OTHERWISE SPECIFIED.

2. CAVITIES TO ACCEPT TERMINAL 12077939 OR EQUIVALENT.

3. CONNECTOR MATES TO PRIMARY FUEL INJECTOR ON LT5 ENGINE: R.P.D. P/N 157603 OR EQUIVALENT.

4. WHEN PARTS ARE SHIPPED, THEY MUST BE PACKED IN PLASTIC BAGS OR SHIPPING CONTAINERS MUST BE LINED WITH PLASTIC LINERS. BAGS AND LINERS MUST BE SEALED TO AVOID ENTRY OF FOREIGN MATTER.

5. DIMENSIONS CONTROLLED FOR AUTOMATIC FEEDING AS DENOTED ON DRAWING WITH ▲ '.

6. SEALING CODE 2.

7. ⬡ ' DENOTES DIMENSIONS AND CHARACTERISTICS THAT ARE IMPORTANT TO THE FUNCTION AND/OR PROCESSING OF THE PART. IT DOES NOT NECESSARILY INDICATE AN S.P.C. DIMENSION. THIS DRAWING HAS 23 SNOWCONES.

PART NO.	REV	STATUS	CABLE SEAL P/N & COLOR
12129143	A		12059215 - GREY
12129141	A		12084427 - PURPLE
12084432	B	OBS	12084427 - PURPLE
12065883	D	OBS	12059215 - GREY

PED/INTERGRAPH MICROSTATION	FILE SPEC: ****USER**** CONN*SPECIFICATION********** ******SYTEM******
THIRD ANGLE PROJECTION	METRIC — DIMENSIONS ARE IN MILLIMETERS UNLESS OTHERWISE SPECIFIED.
CODE NO. 6900	TOLERANCE UNLESS OTHERWISE SPECIFIED DECIMAL: ONE PLACE ± 0.3 TWO PLACE ± 0.15 ANGULAR ±2°
G.C. C-5152.MFG-C-001	
DWG. DATE 02NOV88 / SCALE NONE	DR. JAY NEFF — 02NOV88
EST. NO.	CK. JAY NEFF — DATE 02NOV88
REFERENCE NO. 12065455	APPR. A. J. CANNATTI — DATE 01DEC88
	APPR. — DATE
MATERIAL SPEC.	SEE DRAWING
NAME	ASM CONN 2F M/P 280.1 P2S
PART NO. 1208 4494	SIZE D

PACKARD ELECTRIC

ACR-NY