SYMBOL DEFINITION		
A DIMENSION WITHOUT AN INSPECTION REPORT SYMBOL DOES NOT REQUIRE INSPECTION. IT MAY BE CONTROLLED ON THE INDIVIDUAL COMPONENT DRAWING.	TOTAL NO OF INSPECTIONS REQUIRED	15
	LAST NO. USED	12

MISSING SYMBOLS
NO MISSING SYMBOL NUMBER

DWG STATUS					ZONE	REVISION HISTORY	AUTH	DR	APVD 1	APVD 2
DATE	STA	REC	H/P	CHG						
17MR17	R	01	-	-		RELEASED PART DRAWING	435919	JTV	JTV	WHD
20JN18	R	01	AA	-		(2.75) WAS 2.75 ±0.2, PSD WAS 4 AND UPDATED PART AVAILABILITY	439943	SCHA	JAA	WHD

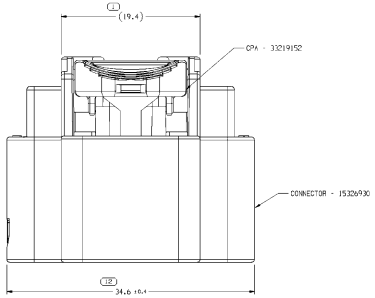

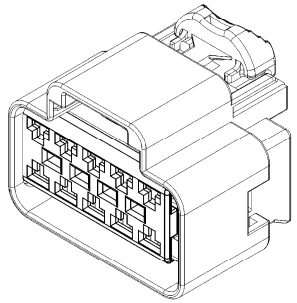

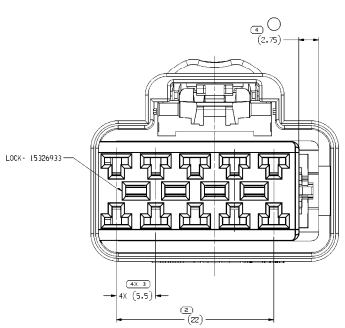

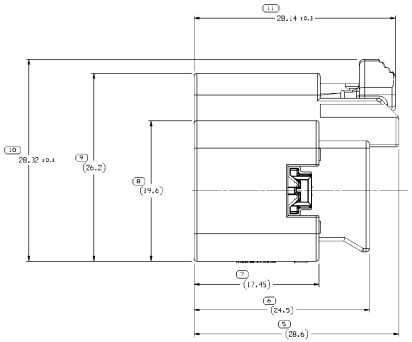

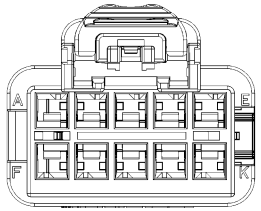

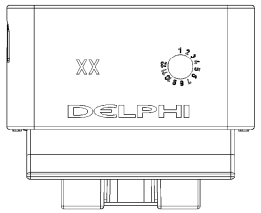

NOTES

1. UNLESS OTHERWISE SPECIFIED AND/OR INDICATED:

   DIMENSIONS ARE TO FACE OF VIEW SHOWN AND AUTOMATICALLY ROUNDED BY COMPUTER FOR INSPECTION (SEE MATH MODEL FOR PRECISE DIMENSIONS). FOR ALL OTHER DIMENSIONS NOT SHOWN BUT REQUIRED FOR TOOL BUILD, SEE MATH MODEL FOR PRECISE TOOL PATH DATA.

2. THIS PRODUCT IS NOT CATEGORIZED AS AN APPEARANCE ITEM, MINOR IMPERFECTIONS INCLUDING, BUT NOT LIMITED TO, FLOW MARKS, COLOR BLEMISHES, GATE VESTIGE, AND SOFT FLASH THAT DO NOT AFFECT THE FIT, FORM, OR FUNCTION OF THE PART ARE PERMISSIBLE PER EMMP_4-3.CS_01_EN.

3. FOR APPLICATION DATA SEE THE APPLICATION DRAWING.

4. TO ASSURE CORRECT TERMINAL POSITION, AN ELECTRICAL TEST HOLDER APPROVED BY BOTH THE DELPHI PACKARD NORTH AMERICA PRODUCT LINE ENGINEER AND ASSEMBLY TOOLING BUSINESS UNIT MUST BE USED. FAILURE TO USE AN APPROVED TEST HOLDER MAY RESULT IN UNSEATED TERMINALS.

5. SECONDARY LOCK MUST BE IN PRE-STAGE

6. CPA MUST BE IN PRE-STAGE

C (12) PROCESS INSPECTION STANDARDS	REFERENCE
DIMENSIONS ENCLOSED IN A 3 INSPECT. LIMITS ARE TO BE CONSIDERED AS 10 AS TOLERANCE LIMITS OR DEVIATIONS.	

| STANDARD DRAWING TOLERANCE | | | | | |