SYMBOL DEFINITION		
A DIMENSION WITHOUT AN INSPECTION REPORT SYMBOL (J) DOES NOT REQUIRE INSPECTION. IT MAY BE CONTROLLED ON THE INDIVIDUAL COMPONENT DRAWING.	TOTAL NO OF INSPECTIONS REQUIRED	24
	LAST NO. USED	17

MISSING SYMBOLS
5

DWG STATUS					ZONE	REVISION HISTORY	AUTH	DR	APVD	APVD
DATE	STS	REV	N/P	DIB					1	2
10APR17	R	B1	-	-		ALL PARTS - RELEASED PART DRAWING	436283	KYT	KYT	KVC
16MR17	R	B2	-	-		ALL PARTS - UPDATED PART AVAILABILITY	436694	DMG	DMG	KVC
07JL17	R	B3	-	-		ALL PARTS - UPDATED PDM ATTRIBUTES	437256	JAM	JAM	KVC

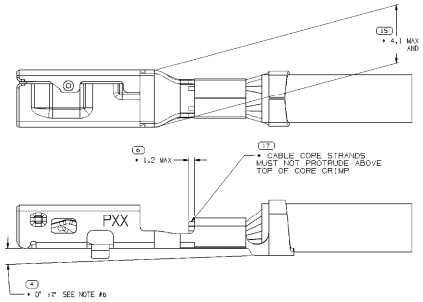

TERMINAL, CABLE ALIGNMENT & POSITION

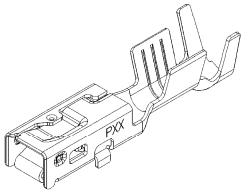

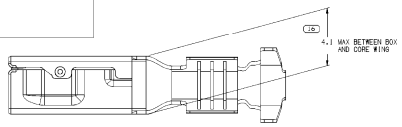

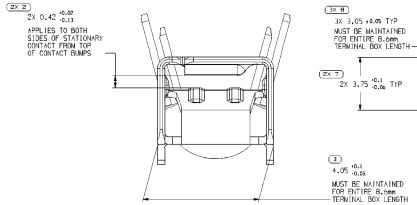

SCALE 20:1

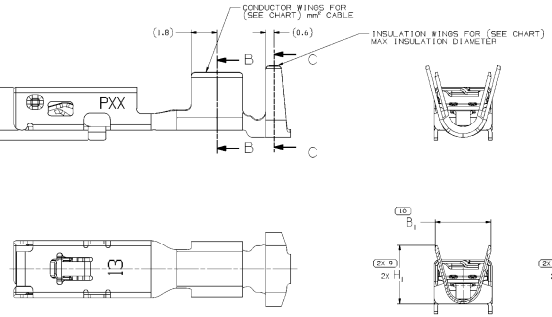

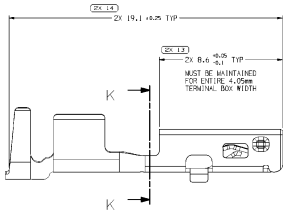

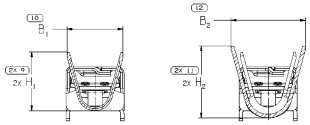

SECTION B-B

SECTION C-C

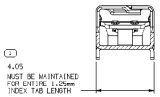

SECTION K-K

NOTES

1. UNLESS OTHERWISE SPECIFIED AND/OR INDICATED:

   DIMENSIONS ARE TO FACE OF VIEW SHOWN AND AUTOMATICALLY ROUNDED BY COMPUTER FOR INSPECTION (SEE MATH MODEL FOR PRECISE DIMENSIONS). FOR ALL OTHER DIMENSIONS NOT SHOWN BUT REQUIRED FOR TOOL BUILD, SEE MATH MODEL FOR PRECISE TOOL PATH DATA.

2. RECOMMENDED MATING BLADE THICKNESS 0.8 +0.04/-0.03mm RECOMMENDED MATING BLADE WIDTH NOT TO EXCEED 2.5mm AND NO LESS THAN 2.4mm. SEE USCAR EWCAP-001 DRAWING (2.8 BLADE) FOR OTHER MATING BLADE REQUIREMENTS.

3. DO NOT PROBE, TEST OR OTHERWISE CONTACT THE INTERIOR REGION (THE OPENING OF ANY MOVING PART) OF THIS TERMINAL. SEVERE DAMAGE CAN OCCUR, COMPROMISING THE PERFORMANCE OF THE ELECTRICAL INTERFACE.

4. MAXIMUM CURRENT CAPACITY AS DEFINED BY USCAR-2 R5 SECTION 5.3.3 IS 35 AMPS WITH 5.0 mm² COPPER CABLE.

5. * DENOTES DIMENSIONS MADE AT CUT-OFF AND CRIMP DIE

6. PLUS ANGLE IS WING BOTTOM SURFACE ROTATED COUNTERCLOCKWISE AGAINST THE BOX BOTTOM SURFACE.

7. PLATING TYPE:

   1. REFLOW TIN 1.9 - 3.3 MICROMETERS THICK OVER NICKEL UNDERPLATE 0.13 - 0.5 MICROMETERS THICK.

   PLATING TYPE INFORMATION SHOWN ABOVE IS FOR REFERENCE ONLY; PLATING REQUIREMENTS ARE CONTAINED IN APPLICABLE MATERIAL SPECIFICATIONS.

8. PARTS MEET THE PERFORMANCE REQUIREMENTS OF GMW3191 DEC 2007 AND SAE/USCAR-2 R5 REVISIONS FOR THE FOLLOWING CLASSIFICATIONS:
   TEMPERATURE CLASS 3 (-40°C TO +125°C)
   VIBRATION CLASS 1 (ON BODY OR CHASSIS)
   SEALING CLASS 1 (UNSEALED).

35063083	01	AB	TIN PLATED HIGH PERF COPPER ALLOY	0.25		1		10	4 - 5	3.2 - 4.2	5.1	6	5	5.5
35063088	01	AB	TIN PLATED HIGH PERF COPPER ALLOY	0.25		1		25	0.13 - 0.22	0.81 - 1.2	1.6	2	1.6	1.9
35063087	01	AB	TIN PLATED HIGH PERF COPPER ALLOY	0.25		1		21	0.3 - 0.6	1.2 - 1.9	2.15	2.8	2.25	3
35063086	01	AB	TIN PLATED HIGH PERF COPPER ALLOY	0.25		1		17	0.75 - 1	1.7 - 2.25	2.7	3.4	2.7	3.5
35063085	01	AB	TIN PLATED HIGH PERF COPPER ALLOY	0.25		1		14	1.5 - 2.5	2 - 3	3.55	4.4	3.7	4.55
35063084	01	AB	TIN PLATED HIGH PERF COPPER ALLOY	0.25		1		13	2 - 3	2.3 - 3.4	3.9	5.2	4.1	5.05
PART NUMBER	REV	N/P	MATERIAL DESCRIPTION	MATERIAL THICKNESS	CONTACT AREA PLATING TYPE (SEE NOTE 7)	CRIMP AREA PLATING TYPE (SEE NOTE 7)	I.D.	CABLE SIZE (mm²)	CABLE DIAMETER	B_1 ±0.15	B_2 ±0.25	(H_1)	(H_2)

J PROCESS INSPECTION STANDARD	REFERENCE
DIMENSIONS ENCLOSED IN A J INDICATE CRITICAL TO FUNCTION (CTF) AND ARE TARGETS FOR ZERO DEFECTS.	
DIMENSIONAL RANGE (MM) FROM TO	SHORT C >12
TOLERANCE UNLESS OTHERWISE SPECIFIED	±0.2
FINISH TOLERANCE (C)	

THIRD ANGLE PROJECTION

DO NOT SCALE

USE MATH DATA

NX

DELPHI

DELPHI PROVIDED ELECTRICAL/ELECTRONIC ARCHITECTURE

COPYRIGHT 2017 DELPHI AUTOMOTIVE SYSTEMS LLC
ALL RIGHTS RESERVED.
THIS DRAWING IS THE PROPERTY OF DELPHI CORPORATION AND CONTAINS DETAILED CONFIDENTIAL INFORMATION. THIS DRAWING MUST NOT BE REPRODUCED IN WHOLE OR IN PART WITHOUT WRITTEN PERMISSION FROM DELPHI CORPORATION. IT MUST NOT BE DISCLOSED TO OTHERS, NOR USED IN CONNECTION WITH ANY DESIGN TO OTHERS, WITHOUT EXPRESS AUTHORIZATION IN WRITING.

		DATE
DR		
APVD1	YANIR TELLEZ	07APR17
APVD2	YANIR TELLEZ	07APR17
APVD3	GREG V. CHUPLEY	07APR17
APVD4		
APVD5		

SUBSTANCES OF CONCERN AND RECYCLED CONTENT PER DELPHI (EMADS)

MATERIALS
SEE CHART

DRAWING NAME
TAXI TERM F DCS 2.8 SN

DRAWING NUMBER
13819334

SIZE	SCALE	TRANS MT	SHEET NO	RTS	REV	TYP
A0	1:01	1 OF 1	2 OF	R	B3	-

PART DRAWING

UNLESS OTHERWISE SPECIFIED

ALL DIMENSIONS ARE IN MILLIMETERS