SYMBOL DEFINITION		
A DIMENSION WITHOUT AN INSPECTION REPORT SYMBOL (□) DOES NOT REQUIRE INSPECTION. IT MAY BE CONTROLLED ON THE INDIVIDUAL COMPONENT DRAWING.	TOTAL NO OF INSPECTIONS REQUIRED	24
	LAST NO. USED	23

MISSING SYMBOLS
NO MISSING SYMBOL NUMBER

DWG STATUS DATE	STA	REL	N/P	DWB	ZONE	REVISION HISTORY	AUTH	DR	APVD 1	APVD 2
17JA13	R	31	-	-	-	1551-2586 - WAS PE24491J, REV'D & RELEASED 1551-2587 - WAS PE24491K, REV'D & RELEASED 1551-2588 - WAS PE24491L, REV'D & RELEASED 1551-2589 - WAS PE24491M, REV'D & RELEASED 1551-2516 - WAS PE24491T, REV'D & RELEASED 1551-2511 - WAS PE24491B, REV'D & RELEASED	420936	FRE	JDR	FRE
04APL3	R	32	-	-	-	ALL PARTS - UPDATED PDM ATTRIBUTES	422801	KJP	CGS	FRE
22APL3	R	33	-	-	-	ALL PARTS - REVISED CONNECTOR	422227	APB	JAN	FRE
09NOL3	R	34	-	-	-	ALL PARTS - REVISED GRAPHICS	424518	EVV	EVV	FRE
27JA14	R	35	-	-	-	ALL PARTS - DIM #22 WAS 2X (10.7) TYP AND REVISED GRAPHICS	474984	KRA	JAN	FRE
25JA14	R	36	-	-	-	ALL PARTS - REVISED GRAPHICS	427424	BLG	BLG	FRE
09MR16	R	37	-	-	-	1551-2587-11 - UPDATED PART AVAILABILITY	432282	KBH	JAN	DGL
19JA17	R	38	-	-	-	1551-2589 - UPDATED PART AVAILABILITY	435485	FRE	FRE	FRE
19MA17	R	39	-	-	-	ALL PARTS - UPDATED APPEARANCE NOTES 1551-2587 - UPDATED PART AVAILABILITY	436771	FRE	FRE	ACV
25MA17	R	40	-	-	-	1551-2588 - UPDATED PART AVAILABILITY	436812	CSD	CSD	ACV

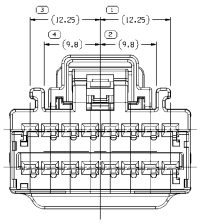

TYPE 102
SAME AS TYPE 101
EXCEPT AS SHOWN

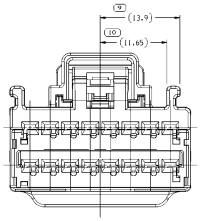

TYPE 105
SAME AS TYPE 101
EXCEPT AS SHOWN

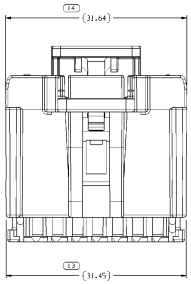

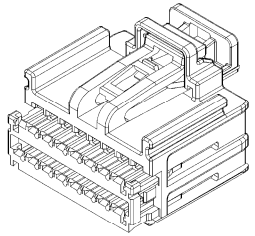

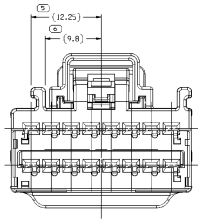

TYPE 103
SAME AS TYPE 101
EXCEPT AS SHOWN

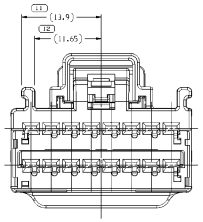

TYPE 106
SAME AS TYPE 101
EXCEPT AS SHOWN

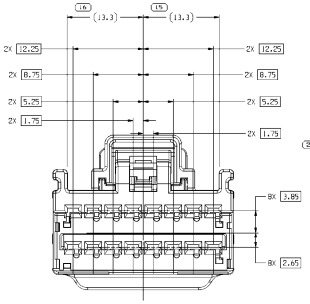

TYPE 101

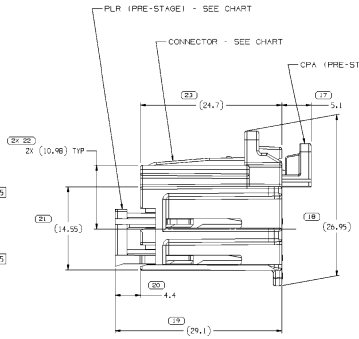

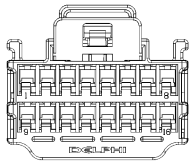

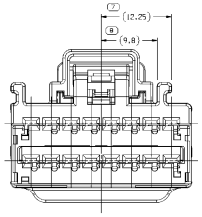

TYPE 104
SAME AS TYPE 101
EXCEPT AS SHOWN

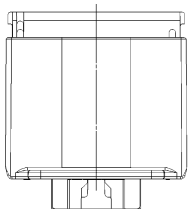

NOTES

1. UNLESS OTHERWISE SPECIFIED AND/OR INDICATED:

   DIMENSIONS ARE TO FACE OF VIEW SHOWN AND AUTOMATICALLY ROUNDED BY COMPUTER FOR INSPECTION (SEE MATH MODEL FOR PRECISE DIMENSIONS). FOR ALL OTHER DIMENSIONS NOT SHOWN BUT REQUIRED FOR TOOL BUILD, SEE MATH MODEL FOR PRECISE TOOL PATH DATA.

2. PART IS MANUFACTURED TO GEOMETRIC TOLERANCES. CENTERLINE DIMENSIONS ARE FOR REFERENCE ONLY.

3. SEALING CODE 0 - UNSEALED

4. THIS PRODUCT IS NOT CATEGORIZED AS AN APPEARANCE ITEM. MINOR IMPERFECTIONS INCLUDING, BUT NOT LIMITED TO, FLOW MARKS, COLOR BLEMISHES, GATE VESTIGES, AND SOFT FLASH THAT DO NOT AFFECT THE FIT, FORM, OR FUNCTION OF THE PART ARE PERMISSIBLE PER EANP_4_3_CS_01_EN.

5. FOR APPLICATION DATA SEE THE INDIVIDUAL APPLICATION DRAWINGS.

PART NO	REV	N/P	TYPE	CONNECTOR	PLR	CPA	USCAR OPTION
1559-2511	06	AB	106	1551-2505	1398-8816	1551-2514	F
1559-2510	06	AB	105	1551-2504	1398-8816	1551-2514	E
1551-2509	06	AC	104	1551-2503	1398-8816	1551-2514	D
1551-2508	06	AC	103	1551-2502	1398-8816	1551-2514	C
1551-2507	06	AB	102	1551-2500	1398-8816	1551-2514	B
1551-2506	06	AA	101	1551-2498	1398-8816	1551-2514	A

(N/A) PROCESS INSPECTION STANDARDS

REFERENCE

DIMENSIONS ARE CHECKED AT 2 LEVELS: 1) ASSEMBLY LEVEL 2) PER ASME Y14.5M-1994 LIMITS AND FITS PLUS/MINUS

| STANDARD DRAWING TOLERANCE | | |