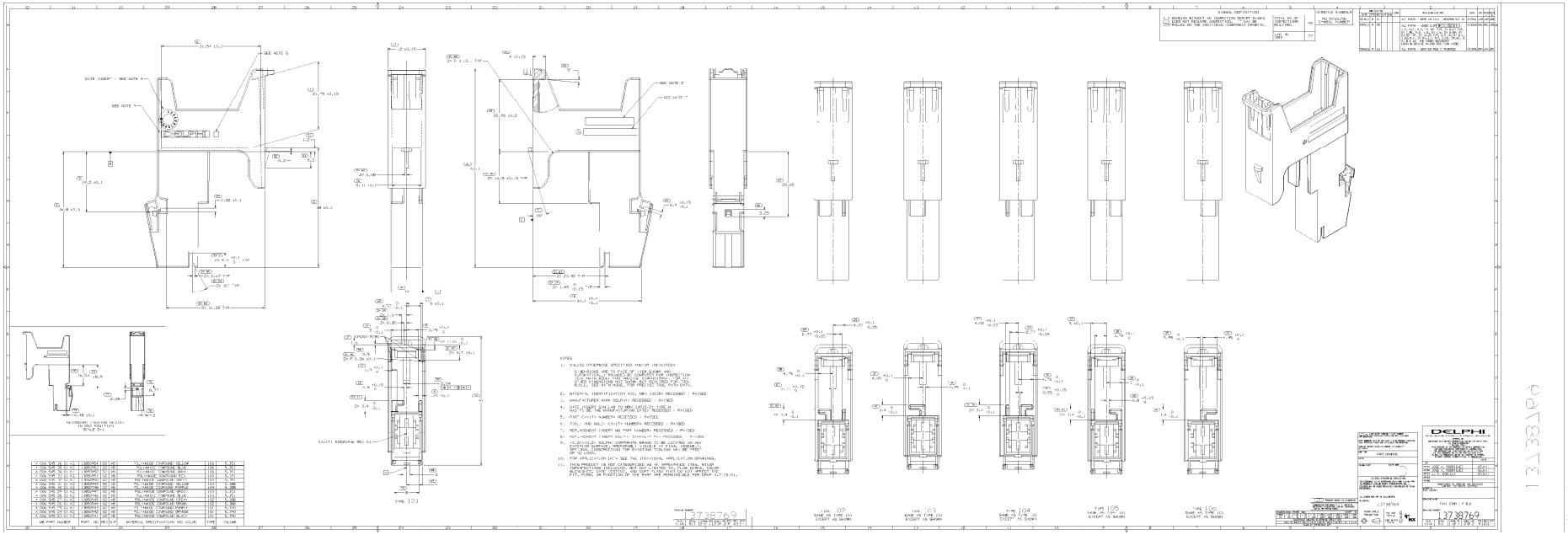


MB PART NUMBER	PART NO REVLVL	MATERIAL SPECIFICATION AND COLOR	TYPE	VOLUME
A 006 545 31 01 26	88820562 001 00	POLYAMIDE CHARGING YELLOW	101	5,741
A 006 545 32 01 26	88820563 001 00	POLYAMIDE CHARGING BLACK	101	5,741
A 006 545 34 01 26	88820565 001 00	POLYAMIDE CHARGING GREY	101	5,741
A 006 545 35 01 26	88820566 001 00	POLYAMIDE CHARGING BLUE	101	5,741
A 006 545 37 01 26	88820567 001 00	POLYAMIDE CHARGING GREEN	101	5,741
A 006 545 38 01 26	88820568 001 00	POLYAMIDE CHARGING YELLOW	101	5,388
A 006 545 39 01 26	88820569 001 00	POLYAMIDE CHARGING BLACK	101	5,388
A 006 545 41 01 26	88820570 001 00	POLYAMIDE CHARGING GREY	101	5,388
A 006 545 28 01 26	88820556 001 00	POLYAMIDE CHARGING BLUE	101	5,741
A 006 545 29 01 26	88820557 001 00	POLYAMIDE CHARGING GREEN	101	5,741
A 006 545 30 01 26	88820558 001 00	POLYAMIDE CHARGING YELLOW	101	5,741
A 006 545 75 01 26	88820615 001 00	POLYAMIDE CHARGING YELLOW	101	5,741
A 006 545 76 01 26	88820616 001 00	POLYAMIDE CHARGING BLACK	101	5,741
A 006 545 77 01 26	88820617 001 00	POLYAMIDE CHARGING BLUE	101	5,741

NOTES

1. UNLESS OTHERWISE SPECIFIED AND/OR INDICATED:
   - A. ALL EDGES ARE TO FACE OF FILM SHOWN AND
   - B. DIMENSIONS ARE APPLICABLE AT CONDITIONS FOR INSPECTION (TEMPERATURE, HUMIDITY, ETC.) AS SPECIFIED IN THE MOLDING SPECIFICATION (SEE NOTE 3). ALL DIMENSIONS ARE IN MILLIMETERS AND ARE BASIC. SEE DATUM MODEL FOR PRECISE TOOL PARAMETERS.
2. MATERIAL IDENTIFICATION MOL, MAY 2005 RECESSED / RAISED
3. MANUFACTURER MARK (DELPHI) RECESSED / RAISED
4. DATE (INSERT 2 DIGIT YR AND 2 DIGIT WK OF PART AS SHOWN) RECESSED / RAISED
5. PART CAVITY NUMBER RECESSED / RAISED
6. TOOL - MID MOLD CAVITY NUMBER RECESSED / RAISED
7. MOP_MOMENT (INSERT MB PART NUMBER) RECESSED / RAISED
8. MOP_MOMENT (INSERT DELPHI PART NUMBER) RECESSED / RAISED
9. DATUM FEATURE SIMULATORS ARE TO BE USED AT FIRST ARTICLE INSPECTION (FAI) ONLY. PRODUCTION PARTS MAY BE INSPECTED USING OPTIONAL CONSTRUCTION FOR EXISTING TOOLING MB "PRO" FIXTURE.
10. FOR APPLICATION DATA SEE THE INDIVIDUAL APPLICATION DRAWING.
11. THIS PRODUCT IS NOT CATEGORIZED AS AN APPEARANCE ITEM, MINOR IMPERFECTIONS (INCLUDING, BUT NOT LIMITED TO, FLOW MARKS, COLOR VARIATION, SINK, VOIDS, ETC.) ARE NOT CONSIDERED DEFECTS. FIT, FORM, OR FUNCTION OF THE PART ARE PRIORITIES PER DPCM-17-TS-01.

ITEM	QTY	PART NUMBER	DESCRIPTION
1	1	3738769	CONNECTOR ASSY
2	1	88820562	HOUSING
3	1	88820563	CPA
4	1	88820565	TERMINAL
5	1	88820566	SEAL

3738769

THIS DRAWING AND SPECIFICATION, EITHER PATENTABLE OR NOT, IS THE PROPERTY OF DELPHI AND IS LOANED SUBJECT TO RETURN ON REQUEST. IT MAY NOT BE USED IN WHOLE OR IN PART AS THE BASIS FOR MANUFACTURE OR SALE OF ITEMS WITHOUT WRITTEN PERMISSION. ALL RIGHTS RESERVED UNDER COPYRIGHT LAWS.

DELPHI

3738769

13 3 38769