L_w	L_1	L_2	L_3	X_1 ±0.05	H_1 ±0.2	H_2 ±0.2	H_3 ±0.2	H_4 ±0.2	B_1 ±0.2	B_2 ±0.2	B_3 ±0.2	B_4 ±0.2	CABLE-TYPE LTG.-TYP	PART-NO. MALE-CONTACT TEILE-NR.	MATERIAL BASIS-WERKSTOFF WERKSTOFF	SURFACE MALE-CONTACT OBERFLAECHE	MATERIAL BASIS-WERKSTOFF WERKSTOFF	SURFACE MALE-CONTACT OBERFLAECHE	MATERIAL BASIS-WERKSTOFF WERKSTOFF	APPLICATION AUSFUEHRUNG	SURFACE MALE-CONTACT OBERFLAECHE	OKZ ⚠	CROSS SECTION QUERSCH.	PITCH/ TRANSPORT	PART-NO.	PART REV	DATE DATUM	MASS. MASSE GR
21.5	5.70	1.50	1.25	0.20	1.75	1.50	1.60		1.80	1.50	1.60		FLRY-B		X10CRNi18B	BLANK	CuFe2P	SN	CuFe2P	BASIC	Sn	I	0.08-0.13	5.08	1875725	01	04API	0.12
21.1	5.30	1.80	2.50	0.20	2.64			1.90	2.57			1.93	FLRY-B		X10CRNi18B	BLANK	CuFe2P	SN	CuFe2P				0.25-0.35	5.08	1580986	01	150C07	0.18
21.1	5.30	1.80	2.50	0.20	3.23			2.40	2.82			2.50	FLRY-B		X10CRNi18B	BLANK	CuFe2P	SN	CuFe2P				0.50-0.75	10.16	1580988	01	150C07	0.20
21.5	5.70	1.50	1.25	0.20	1.75	1.50	1.60		1.80	1.50	1.60		FLRY-B		X10CRNi18B	BLANK	CuFe2P	SN	CuFe2P		Ag	II	0.08-0.13	5.08	1968985	01	21JN12	0.12
21.1	5.30	1.80	2.50	0.20	2.64			1.90	2.57			1.93	FLRY-B		X10CRNi18B	BLANK	CuFe2P	SN	CuFe2P				0.25-0.35	5.08	1968997	01	21JN12	0.18
21.1	5.30	1.80	2.50	0.20	3.23			2.40	2.82			2.50	FLRY-B		X10CRNi18B	BLANK	CuFe2P	SN	CuFe2P				0.50-0.75	10.16	1968000	01	21JN12	0.20
21.5	5.70	1.50	1.25	0.20	1.75	1.50	1.60		1.80	1.50	1.60		FLRY-B		X10CRNi18B	BLANK	CuFe2P	SN	CuFe2P		Au	III	0.08-0.13	5.08	1875726	01	04API	0.12
21.1	5.30	1.80	2.50	0.20	2.64			1.90	2.57			1.93	FLRY-B		X10CRNi18B	BLANK	CuFe2P	SN	CuFe2P				0.25-0.35	5.08	1580990	01	150C07	0.18
21.1	5.30	1.80	2.50	0.20	3.23			2.40	2.82			2.50	FLRY-B		X10CRNi18B	BLANK	CuFe2P	SN	CuFe2P				0.50-0.75	10.16	1580992	01	150C07	0.20
21.7	6.00	2.00	2.50	0.60	1.75			1.90	1.89			1.93	FLRY-B	1532791.3	X10CRNi18B	BLANK	CuFe2P	SN	CuFe2P	SINGLE CONDUCTOR SEALED	Sn	I	0.25-0.35	10.16	1580994	01	150C07	0.22
21.7	6.00	2.00	2.50	0.60	1.48			2.40	1.89			2.50	FLRY-B	1532791.8	X10CRNi18B	BLANK	CuFe2P	SN	CuFe2P				0.50-0.75	10.16	1580996	01	150C07	0.24
21.7	6.00	2.00	2.50	0.60	1.75			1.90	1.89			1.93	FLRY-B	1532791.3	X10CRNi18B	BLANK	CuFe2P	SN	CuFe2P		Ag	II	0.25-0.35	10.16	1968995	01	21JN12	0.22
21.7	6.00	2.00	2.50	0.60	1.48			2.40	1.89			2.50	FLRY-B	1532791.8	X10CRNi18B	BLANK	CuFe2P	SN	CuFe2P				0.50-0.75	10.16	1968996	01	21JN12	0.24
21.7	6.00	2.00	2.50	0.60	1.75			1.90	1.89			1.93	FLRY-B	1532791.3	X10CRNi18B	BLANK	CuFe2P	SN	CuFe2P		Au	III	0.25-0.35	10.16	1580998	01	150C07	0.22
21.7	6.00	2.00	2.50	0.60	1.48			2.40	1.89			2.50	FLRY-B	1532791.8	X10CRNi18B	BLANK	CuFe2P	SN	CuFe2P				0.50-0.75	10.16	1580600	01	150C07	0.24

DATE	STATUS	TYPE	REVISION HISTORY	AUTH	DR	APVD 1	APVD 2
150C07	R	01	INITIAL RELEASE / FREIGABE		W.SAC	E.CHA	W.SKR
150K01	R	02	[illegible]		FRI	GUT	
18SE12	R	03	[illegible]		FRI	GUT	
05DC12	R	03.A1	[illegible]	K13			
				L5	FRI	GUT	
17JA14	R	04	[illegible]		K.JUN	ALFHA	SYS

BASIC APPLICATION / STANDARD VARIANTE

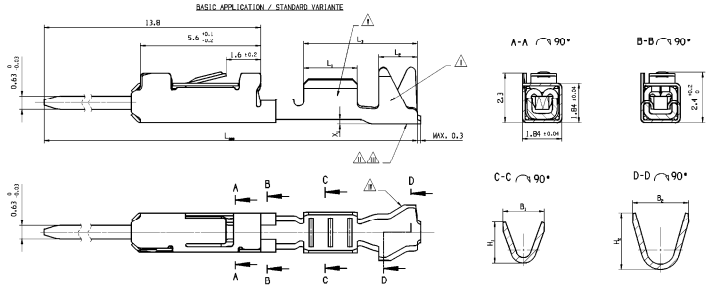

L-SHAPE APPLICATION / L-SHAPE VARIANTE

CRIMP VIEW 0.08-0.13mm² / CRIMP ANSICHT 0.08-0.13mm²
MISSING DIMENSIONS AND DETAILS SEE BASIC APPLICATION
FEHLENDE MASSE UND ANGABEN SIEHE STANDARD-VARIANTE

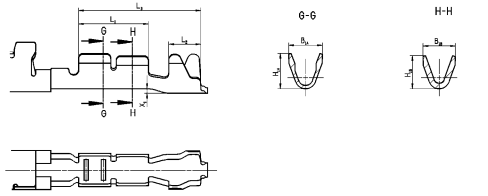

VIEW OF THE CARRIER STRIP
IS NOT IN SCALE
ABBILDUNG DES ANBINDUNGS-
STREIFENS NICHT MASSTAEBLICH

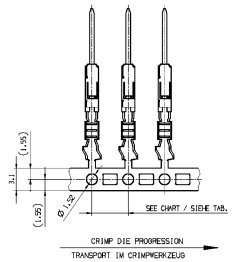

SINGLE CONDUCTOR SEALED / EINZELADER GEDICHTETE VARIANTE

MISSING DIMENSIONS AND DETAILS SEE BASIC APPLICATION
FEHLENDE MASSE UND ANGABEN SIEHE STANDARD-VARIANTE

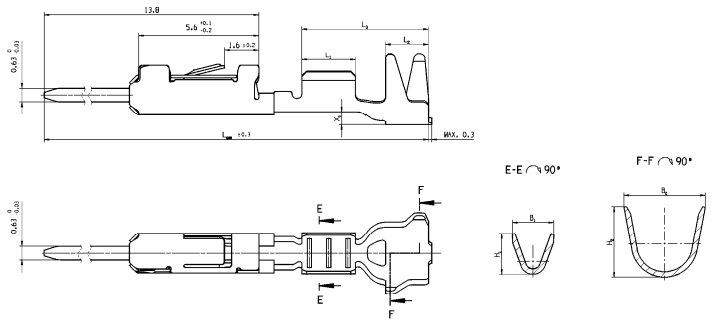

REMARKS/ BEMERKUNGEN

- CRIMP MANUFACTURING PARAMETERS AND TOOLING ACCORDING TO DELPHI-SPECIFICATION
  CRIMPVERARBEITUNGSPARAMETER UND -WERKZEUGE GEMAESS DELPHI-SPEZIFIKATION

⚠ SURFACE INDEX: Sn= I / Ag= II / AU= III
OBERFLAECHEN-KENNZEICHNUNG: Sn= I / Ag= II / AU= III

⚠ COMPANY LABEL
⚠ FIRMENZEICHEN
⚠ DATECODE: WWYY
⚠ DATUMSCODE: WWJJ
⚠ REVISION STATUS OUTSIDE OF ISOCRIMP
⚠ REVISIONSSTAND IM AUSSENBEREICH ISOCRIMP
⚠ SERRATIONS NOT VISIBLE IN THIS AREA
⚠ RILLENPRAEGUNG IM AUSSENBEREICH NICHT SICHTBAR

KEY PRODUCT CHARACTERISTICS			
SAFETY/COMPLIANCE	FIT/FUNCTION	TOTAL NPI DRAWING	0
S/C CHECKPOINTS	F/F CHECKPOINTS	LAST NO. USED	0
NO & TYPE	DESCRIPTION	RATIONALE	PTS	ZONE

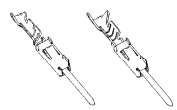

DELPHI

DELPHI DEUTSCHLAND GMBH
D-42119 WUPPERTAL

COPYRIGHT 2007 DELPHI CORPORATION AND/OR ITS AFFILIATES.
ALL RIGHTS RESERVED.
DELPHI CONFIDENTIAL
THIS DRAWING IS THE PROPERTY OF DELPHI CORPORATION OR ITS AFFILIATES. IT CONTAINS CONFIDENTIAL INFORMATION AND TRADE SECRETS. THIS DRAWING MUST BE RETURNED UPON REQUEST. NO PART OF THIS DRAWING MAY BE DISCLOSED, REPRODUCED, OR USED FOR ANY PURPOSE WITHOUT EXPRESS WRITTEN AUTHORIZATION. (© PROPRIETARY).

CECI DESSIN EST SOUMIS AUX MEMES DROITS QUE CEUX DE DELPHI (DEFINIS CI-DESSUS) ET DOIT ETRE RETOURNE SUR DEMANDE. AUCUNE PARTIE DE CE DESSIN NE PEUT ETRE DIVULGUEE, REPRODUITE OU UTILISEE SANS AUTORISATION ECRITE DE DELPHI CORPORATION (DROIT RESERVE).

		DATE
DR	M.SACH	140C07
APVD1	E.CHANA	150C07
APVD2	W.SIKORA	100K08
APVD3		
APVD4		
APVD5		

SUBSTANCES OF CONCERN AND RECYCLED CONTENT (PER DELPHI 10A9001 PETAL-001, BEFORE FINAL WEIGHT AND MATERIALS). REQUIRED DATA: (BASED)

DESCRIPTION: SEE CHART / SIEHE TABELLE

DRAWING NAME: MICRO TERMINAL SYSTEM
PRODUCT GROUP DRAWING, MALE TERMINAL

MICRO TERMINAL SYSTEM
TABELLENZEICHNUNG, STIFTKONTAKT

DRAWING NUMBER: 1 3580602

SIZE	SCALE	PAGE OF	SHEET NO	TYPE	REV	REP
A0	1:1	1 OF 1	1 OF 1	R	04	

GENERAL TOLERANCES ACCORDING TO:
SEE CHART / SIEHE TABELLE

DIST ACCORDING TO:
ISO 1101

THIRD ANGLE PROJECTION

DO NOT SCALE
USE MATH DATA

UNPUBLISHED DRAWINGS ARE ONLY AVAILABLE ON THE SERVER