KEY PRODUCT CHARACTERISTICS

SAFETY/COMPLIANCE	FIT/FUNCTION	TOTAL ON DRAWING	0
S/C CHECKPOINTS	F/F CHECKPOINTS	LAST NO. USED	0

NO & TYPE	DESCRIPTION	RATIONALE	PTS	ZONE
- -	- -	- -	-	-

L_{ges}	X_1	L_4	L_3	L_2	L_1	R_3 ±0.1	R_2 ±0.1	R_1 ±0.1	H_3 ±0.2	H_2 ±0.2	H_1 ±0.2	B_3 ±0.2	B_2 ±0.2	B_1 ±0.2	CABLE-TYPE LTG.-TYP	PART-NO. SEAL/DICHTUNG TEILE-NR.	MATERIAL SLEEVE/UEBERFEDER WERKSTOFF	SURFACE SLEEVE/UEBERFEDER OBERFLAECHE	MATERIAL TERM.BODY/BASISTEIL WERKSTOFF	APPLICATION AUSFUEHRUNG	SURFACE TERM.BODY/BASISTEIL OBERFLAECHE	OKZ	CROSS SECTION QUERSCH.	PITCH TRANSPORT	PART-NO.	PART REV	DATE DATUM
13.70	0.20	1.50	5.70	1.50	3.25	0.50	0.75	0.50	1.50	1.80	1.60	1.50	1.90	1.60	FLMRY-A		X10CrNi18 8	BLANK	CuNi3Si1Mg	BASIC	f.Sn3	I	0.08-0.13	5.08	13787415	01	29OC13
13.30	0.20		5.30	1.80	2.50		0.90	0.60		2.64	1.90		2.57	1.93	FLRY-B		X10CrNi18 8	BLANK	CuNi3Si1Mg				0.25-0.35	5.08	13580633	01	06SE07
13.30	0.20		5.10	1.90	2.50		0.90	0.80		3.23	2.15		2.82	2.15	FLRY-B		X10CrNi18 8	BLANK	CuNi3Si1Mg				0.50-0.75	5.08	13580635	01	06SE07
14.40	0.20		6.20	2.00	3.25		1.20	1.00		3.80	3.45		3.75	3.10	FLRY-B		X10CrNi18 8	BLANK	CuNi3Si1Mg				1.00-1.50	10.16			
13.70	0.20	1.50	5.70	1.50	3.25	0.50	0.75	0.50	1.50	1.80	1.60	1.50	1.90	1.60	FLMRY-A		X10CrNi18 8	BLANK	CuNi3Si1Mg		sel.Ag	II	0.08-0.13	5.08	15540372	01	29OC13
13.30	0.20		5.30	1.80	2.50		0.90	0.60		2.64	1.90		2.57	1.93	FLRY-B		X10CrNi18 8	BLANK	CuNi3Si1Mg				0.25-0.35	5.08	15540349	01	29OC13
13.30	0.20		5.10	1.90	2.50		0.90	0.80		3.23	2.15		2.82	2.15	FLRY-B		X10CrNi18 8	BLANK	CuNi3Si1Mg				0.50-0.75	5.08	15540356	01	29OC13
14.40	0.20		6.20	2.00	3.25		1.20	1.00		3.80	3.45		3.75	3.10	FLRY-B		X10CrNi18 8	BLANK	CuNi3Si1Mg				1.00-1.50	10.16			
13.70	0.20	1.50	5.70	1.50	3.25	0.50	0.75	0.50	1.50	1.80	1.60	1.50	1.90	1.60	FLMRY-A		X10CrNi18 8	BLANK	CuNi3Si1Mg		sel.Au	III	0.08-0.13	5.08	13787416	01	29OC13
13.30	0.20		5.30	1.80	2.50		0.90	0.60		2.64	1.90		2.57	1.93	FLRY-B		X10CrNi18 8	BLANK	CuNi3Si1Mg				0.25-0.35	5.08	13580637	01	29OC13
13.30	0.20		5.10	1.90	2.50		0.90	0.80		3.23	2.15		2.82	2.15	FLRY-B		X10CrNi18 8	BLANK	CuNi3Si1Mg				0.50-0.75	5.08	13580639	01	29OC13
14.40	0.20		6.20	2.00	3.25		1.20	1.00		3.80	3.45		3.75	3.10	FLRY-B		X10CrNi18 8	BLANK	CuNi3Si1Mg				1.00-1.50	10.16			
13.30	0.20		5.30	1.80	2.50		0.90	0.60		2.64	1.90		2.57	1.93	FLRY-B		X10CrNi18 8	BLANK	CuNi3Si1Mg		sel.Au/GEL ⚠	III	0.25-0.35	5.08	13580641	01	29OC13
13.30	0.20		5.10	1.90	2.50		0.90	0.80		3.23	2.15		2.82	2.15	FLRY-B		X10CrNi18 8	BLANK	CuNi3Si1Mg				0.50-0.75	5.08	13580644	01	29OC13
13.90	0.60	0.75	6.00	2.00	2.50	0.50	1.55	0.50	1.50	3.48	1.60	1.50	3.89	1.60	FLMRY-A	33120594	X10CrNi18 8	BLANK	CuNi3Si1Mg	SINGLE CONDUCTOR SEALED	f.Sn3	I	0.08-0.13	10.16(7.00)	33255703	01	20JL20
13.90	0.60		6.00	2.00	2.50		1.55	0.60		3.48	1.90		3.89	1.93	FLRY-B	15327913	X10CrNi18 8	BLANK	CuNi3Si1Mg				0.25-0.35	10.16(7.00)	13580646	01	06SE07
13.90	0.60		6.00	2.00	2.50		1.55	0.60		3.48	2.15		3.89	2.15	FLRY-B	15327918	X10CrNi18 8	BLANK	CuNi3Si1Mg				0.50-0.75	10.16(7.00)	13580648	01	06SE07
13.90	0.60	0.75	6.00	2.00	2.50	0.50	1.55	0.50	1.50	3.48	1.60	1.50	3.89	1.60	FLMRY-A	33120594	X10CrNi18 8	BLANK	CuNi3Si1Mg		sel.Ag	II	0.08-0.13	10.16(7.00)	33255702	01	20JL20
13.90	0.60		6.00	2.00	2.50		1.55	0.60		3.48	1.90		3.89	1.93	FLRY-B	15327913	X10CrNi18 8	BLANK	CuNi3Si1Mg				0.25-0.35	10.16(7.00)	13969699	01	29OC13
13.90	0.60		6.00	2.00	2.50		1.55	0.80		3.48	2.15		3.89	2.15	FLRY-B	15327918	X10CrNi18 8	BLANK	CuNi3Si1Mg				0.50-0.75	10.16(7.00)	13969690	01	29OC13
13.90	0.60	0.75	6.00	2.00	2.50	0.50	1.55	0.50	1.50	3.48	1.60	1.50	3.89	1.60	FLMRY-A	33120594	X10CrNi18 8	BLANK	CuNi3Si1Mg		sel.Au	III	0.08-0.13	10.16(7.00)	35441183	01	20JL20
13.90	0.60		6.00	2.00	2.50		1.55	0.60		3.48	1.90		3.89	1.93	FLRY-B	15327913	X10CrNi18 8	BLANK	CuNi3Si1Mg				0.25-0.35	10.16(7.00)	13580650	01	29OC13
13.90	0.60		6.00	2.00	2.50		1.55	0.80		3.48	2.15		3.89	2.15	FLRY-B	15327918	X10CrNi18 8	BLANK	CuNi3Si1Mg				0.50-0.75	10.16(7.00)	13580652	01	29OC13
15.10	0.20		5.30	1.80	2.50		0.90	0.60		2.64	1.90		2.57	1.93	FLRY-B		X10CrNi18 8	BLANK	CuNi3Si1Mg	TWIN-DOT	TwinDot sel.Au	III	0.25-0.35	5.08	13580654	01	29OC13
15.10	0.20		5.10	1.90	2.50		0.90	0.80		3.23	2.15		2.82	2.15	FLRY-B		X10CrNi18 8	BLANK	CuNi3Si1Mg				0.50-0.75	5.08	13580656	01	29OC13
5 13.30	0.20		5.10	1.90	2.50		0.90	0.80		3.23	2.15		2.82	2.15	FLALRY		X10CrNi18 8	BLANK	CuFe2P	ALU	f.Sn3	I	0.75	5.08	13985034	01	12OC17

05AB 2 05AB 4 3

DWG STATUS DATE	STG	REV	N/P	CHG	ZONE	REVISION HISTORY	AUTH	DR	APVD 1	APVD 2
06SE07	R	01		--		INITAL RELEASE / FREIGABE		M.SAC	E.CVA	M.SKR
29OC13	R	02		--	M5	SEL.AU : III WAS/WAR II		M.PHI	E.CVA	SYS
					B6	PART-NO. WITH CROSS-SECTION 0.08-0.13MM2 ADDED PART-NR. MIT QUERSCHNITT 0.08-0.13MM2 HINZU PART-NO. FOR SURFACE SEL.AG ADDED PART-NR. FUER OBERFLAECHE SEL. AG HINZU REMARKS FOR PART IDENTIFICATION ADDED BEMERKUNGEN FUER TEILEBESCHRIFTUNG HINZU				
15AU14	R	03		--		PART-NO./ NR. 13787415 / 15540372 / 13787416 R_3 0.75 WAS/WAR 0.55		K.BRA	M.PHI	SYS
10DE14	R	03	AA		M3	PART REVISION SET BACK TO 01 TEILE KENNZEICHNUNG ZURUECKGESETZT AUF 01		M.PHI	E.CVA	SYS
		04		--	K/L4	PART-NO./ NR. 33255702 / 33255703 AND PE 354741 ADDED/ HINZU AS/ ALS AVAILABLE/ VERFUEGBAR		M.PHI	E.CVA	
27NO17	R	05				PART-NO. / NR: 13985034 ADDED / HINZU		K.BRA	R.GUT	SYS
19JN18	R	05	AA		K12	13985034 L_{ges}(3.3 WAS 15.1 WISTAKE CORRECTED 13985034 L_{ges}(3.3 WAR 15.1 FEHLER KORRIGIERT		K.BRA	R.GUT	SYS
07JL20	R	05	AB		K4 K4 F7 K4 K10	APN 354411B3 WAS/WAR PE 354741 APN 33255702 / 33255703 / 354411B3 SET TO ACTIVE / VERFUEGBAR SEALED L-SHAPE VIEWS ADDED/ GEDICHTETE L-SHAPE ANSICHTEN HINZU DWG MISTAKES CORRECTED/DWG FEHLER KORRIGIERT: PITCH/VORSCHUB 10.16 WAS/WAR 5.08 (0.13mm²) R_3 : 0.5mm WAS/WAR 1.5mm		PHIL	M.POR	SYS
02OC20	R	05	AC		F14	VIEW MISTAKE CORRECTED FEHLERHAFTE ANSICHT KORRIGIERT		PHIL	M.POR	SYS

ALU APPLICATION / ALU VARIANTE

MISSING DIMENSIONS AND DETAILS SEE BASIC APPLICATION
FEHLENDE MASSE UND ANGABEN SIEHE STANDART VARIANTE

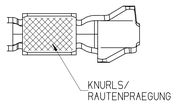

BASIC APPLICATION / STANDARD VARIANTE

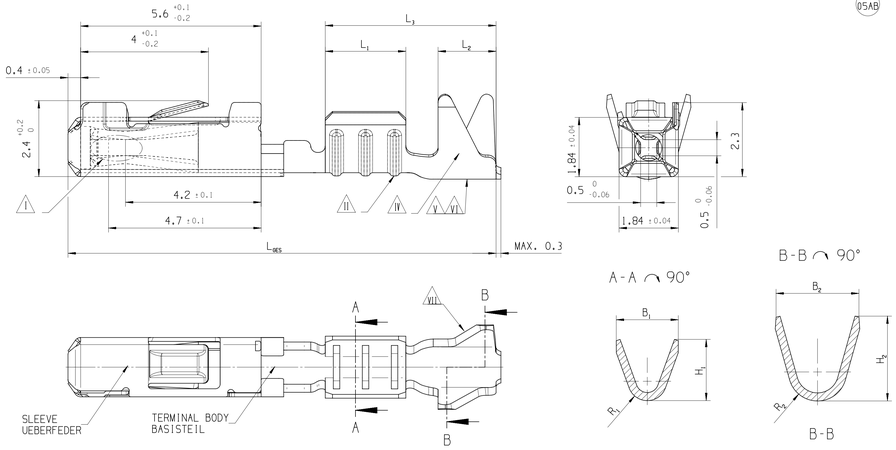

SINGLE CONDUCTOR SEALED / EINZELADER GEDICHTETE VARIANTE

MISSING DIMENSIONS AND DETAILS SEE BASIC APPLICATION
FEHLENDE MASSE UND ANGABEN SIEHE STANDARD VARIANTE

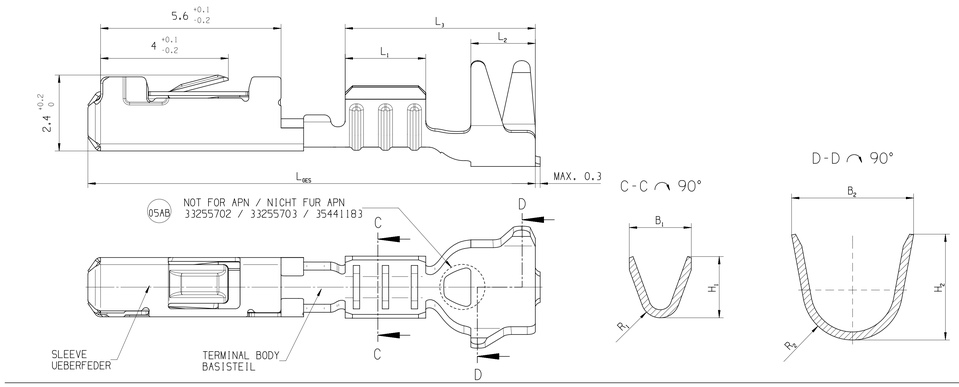

L-SHAPE APPLICATION / L-SHAPE VARIANTE

CRIMP VIEW 0,08-0,13mm² / CRIMP ANSICHT 0,08-0,13MM²
MISSING DIMENSIONS AND DETAILS SEE BASIC APPLICATION
FEHLENDE MASSE UND ANGABEN SIEHE STANDARD VARIANTE

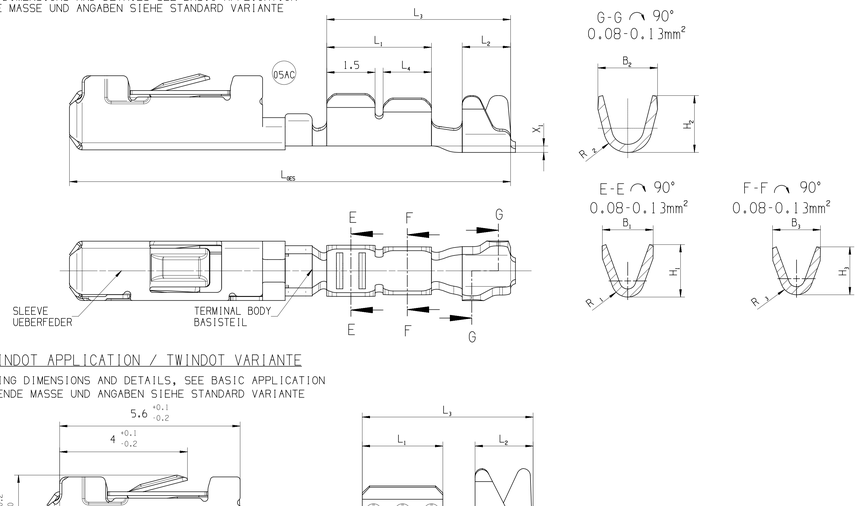

L-SHAPE APPLICATION / L-SHAPE VARIANTE

CRIMP VIEW 0,08-0,13mm² / CRIMP ANSICHT 0,08-0,13MM² 05AB
MISSING DIMENSIONS AND DETAILS SEE SEALED APPLICATION
FEHLENDE MASSE UND ANGABEN SIEHE GEDICHTETE VARIANTE

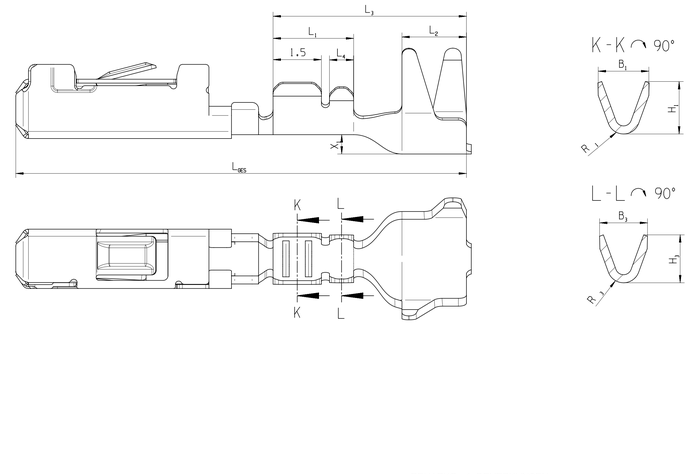

TWINDOT APPLICATION / TWINDOT VARIANTE

MISSING DIMENSIONS AND DETAILS, SEE BASIC APPLICATION
FEHLENDE MASSE UND ANGABEN SIEHE STANDARD VARIANTE

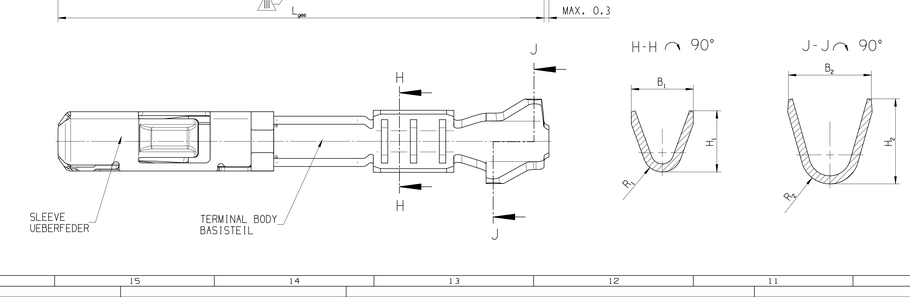

VIEW OF THE CARRIER STRIP
IS NOT IN SCALE
ABBILDUNG DES ANBINDUNGS-
STREIFENS NICHT MASSTAEBLICH

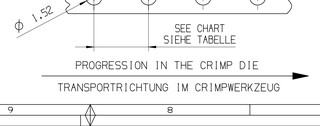

REMARKS / BEMERKUNGEN

- ⚠ I — ESPECIAL FOR VERSION sel.Au/GEL:
  IN THE CONTACTAREA, FILLED WITH GEL
  NUR FUER VARIANTE sel.Au/GEL:
  IM KONTAKTIERUNGSBEREICH, MIT GEL GEFUELLT
- ⚠ II — OUTER EMBOSSMENT ONLY FOR CRIMP SECTION 0.50-0.75
  AUSSENPRAEGUNG NUR FUER CRIMPQUERSCHITT 0.50-0.75
- ⚠ III — THIS AREA SELECTIVE AU
  DIESER BEREICH SELEKTIV AU
- ⚠ IV — SURFACE INDEX, CONTACT AREA
  OBERFLAECHEN KENNZEICHNUNG, KONTAKTIERUNGSBEREICH
- CRIMP MANUFACTURING PARAMETERS AND TOOLING ACCORDING TO DELPHI-SPECIFICATION
  CRIMPVERARBEITUNGSPARAMETER UND WERKZEUGE GEMAESS DELPHI-SPECIFICATION

2
- V — COMPANY LABEL
  FIRMENZEICHEN
- VI — DATECODE: WWYY
  DATUMSCODE: WWJJ
- VII — REVISION STATUS OUTSIDE OF ISOCRIMP
  REVISIONSSTAND IM AUSSENBEREICH ISOCRIMP

A — LINE DRAWN THROUGH A PART NUMBER INDICATES THAT PHYSICAL PARTS ARE NOT AVAILABLE FOR ORDERING.
PART NUMBERS THAT DO NOT HAVE A LINE PRESENT INDICATE THAT PHYSICAL PARTS ARE AVAILABLE FOR ORDERING.
CONTACT APTIV SALES TO ASSURE AVAILABILITY OF PARTS.
MIT EINER LINE DURCHGESTRICHENE PART-NR GEKENNZEICHNET, DASS DIESE PART-NR NICHT BESTELLT WERDEN KANN.
PART-NR DE KEINE LINE ZEIGEN, KENNZEICHNEN, DAS TEILE ZUR BESTELLUNG VERFUEGBAR SIND
FUER VERFUEGBARKEIT DER PARTS DEN EINKAUF VON APTIV KONTAKTIEREN.

DIMENSIONAL RANGE (MM) NENNMASSBEREICH (MM)		
FROM TO	0 12	>12
TOLERANCE UNLESS OTHERWISE SPECIFIED ALLGEMEINTOLERANZEN		
	±0.1	±0.2
ANGULAR TOLERANCE ± 2° WINKELTOLERANZ ± 2°		

DIM TO CHECK PRUEFMASSE
DIM FOR HELP HILFSMASSE
THEORETIC DIM THEORE. MASSE

DWG TYP
PART DRAWING
WEIGHT (GR)
VOLUME (CM³)
ROUTING
DISTR CODE D

UNLESS OTHERWISE SPECIFIED
GENERAL TOLERANCES ACCORDING TO:
SEE CHART
SIEHE TABELLE
GD&T ACCORDING TO:
ISO 1101

REFERENCE
PART DRAWING

FIRST ANGLE PROJECTION

DO NOT SCALE
USE MATH DATA

SCALE / MASSSTAB:
5:1

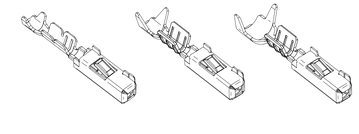

DELPHI
CONNECTION SYSTEMS
D-42119 WUPPERTAL
COPYRIGHT 2007 DELPHI CORPORATION AND/OR ITS AFFILIATES.
ALL RIGHTS RESERVED.
REVISED 2017
THIS DRAWING IS THE PROPERTY OF DELPHI CORPORATION AND CONTAINS DELPHI CONFIDENTIAL INFORMATION. THE REPRODUCTION, DISTRIBUTION AND UTILIZATION OF THIS DOCUMENT OR ITS RELATED CAD MATH DATA, AS WELL AS COMMUNICATION OF ANY CONTENT TO OTHERS, WITHOUT EXPRESS AUTHORIZATION, IS PROHIBITED.
DIESE ZEICHNUNG IST EIGENTUM DER FIRMA DELPHI UND ENTHAELT DELPHI VERTRAULICHE INFORMATIONEN. DIE REPRODUKTION, VERTEILUNG UND NUTZUNG DIESES DOKUMENTES ODER DEREN ZUGEHOERIGEN CAD DATEN, ODER AUCH ALS KOMMUNIKATION VON BELEGBEN INHALT ZU ANDEREN, IST OHNE BERECHTIGUNGSPRUEFUNG DURCH DIE DELPHI CORPORATION UNZULAESSIG.

		DATE
DR	M. SACH	05SE07
APVD1	E.CVASA	06SE07
APVD2	M.SIKORA	05NO08
APVD3		
APVD4		
APVD5		

SUBSTANCES OF CONCERN AND RECYCLED CONTENT PER DELPHI (094900)
POTENTIELL GEFAEHRLICHE STOFFE UND RECYKLATANTEIL GEMAESS DELPHI (094900)

MATERIAL
SEE CHART / SIEHE TABELLE

DRAWING NAME
MICRO TERMINAL SYSTEM
PRODUCT GROUP DRAWING, FEMALE TERMINAL
MICRO TERMINAL SYSTEM
TABELLENZEICHNUNG, STECKHUELSE

DRAWING NUMBER
1 3580658

SIZE	SCALE	FRAME NO	SHEET NO	STG	REV	N/P
A0	15:1	1 OF 1	1 OF 1	R	05	AC

CONTROLLED DOCUMENTS ARE ONLY AVAILABLE ON THE SERVER
Ttmpl: 1B124159
Usgrp: PBHB
PDM: 1_PBHB2008-CYBER_STD/PDM
Dokst: 20-OKT-20 Ttmpl: 1B124159