SYMBOL DEFINITION		
A DIMENSION WITHOUT AN INSPECTION REPORT SYMBOL [ ] DOES NOT REQUIRE INSPECTION. IT MAY BE CONTROLLED ON THE INDIVIDUAL COMPONENT DRAWING.	TOTAL NO OF INSPECTIONS REQUIRED	9
	LAST NO. USED	8

MISSING SYMBOLS
NO MISSING SYMBOL NUMBER

DWG STATUS DATE	STS	REC	N/P	CHG	ZONE	REVISION HISTORY	AUTH	DR	APVD 1	APVD 2
17AU02	R	01	-	-		REDRAWN TO PD	030039	JLZ	DMC	JR
01APR3	R	02	-	-		15305170 - UPDATED PDM ATTRIBUTES	230352	LEG	GEG	JR
04M104	R	03	-	-		15305170, 15305171, 15305172 - REVISED PER NIN ENG 88.15 ALL PARTS - UPDATED DIMS AND ADDED OPTIONAL CONSTRUCTION	254602	CTR	PRG	PRM
15JL04	R	04	-	-		15305169 - UPDATED PDM ATTRIBUTES	256854	MBJ	MBJ	MT
08DC04	R	05	-	-		ALL PARTS - DIM 12 +0.2/-0.15 WAS 12, ADDED ALTERNATE MAT'L SPEC COLUMN 15305170 - CANCELLED REV 02	259649	BPS	JVM	MPR
24JL06	R	06	-	-		15305171 - UPDATED PDM ATTRIBUTES	282787	JRD	AJB	EJH
09NR10	R	07	-	-		ALL PARTS - ADDED "SEALING RIBS..." VIEW DIM 12 +0.4/-0.15 WAS 12 +0.2/-0.15 AND 15305170 - UPDATED MAT'L CALLOUT	410192	JRL	JRL	MRP

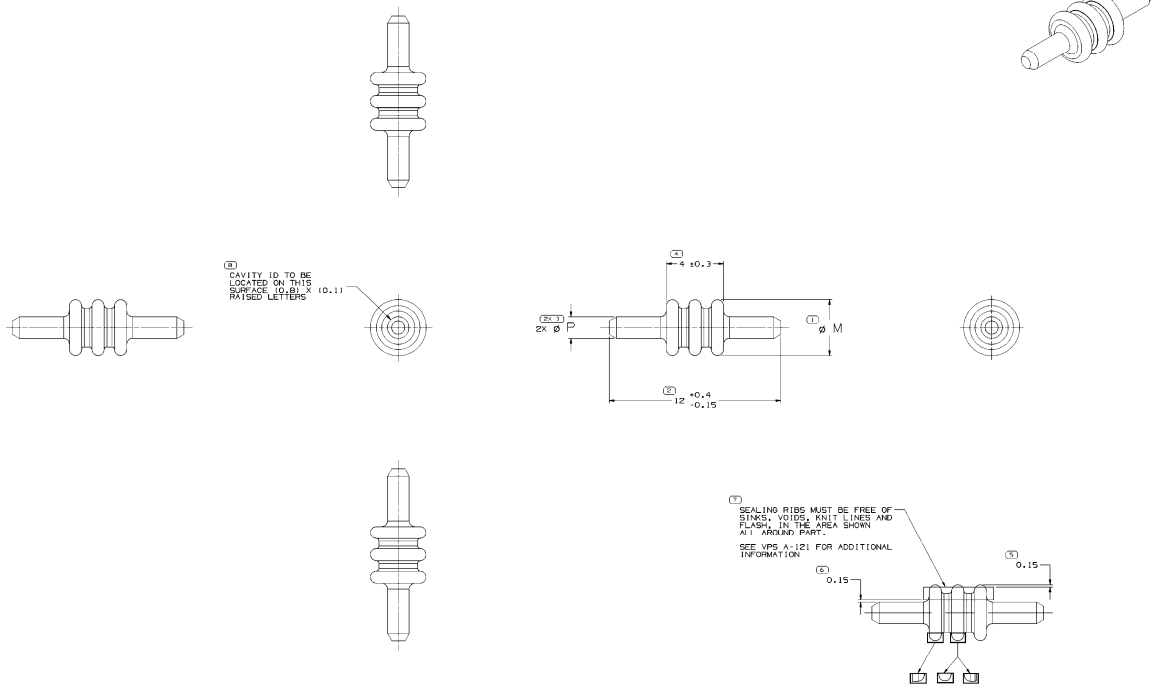

SEALING RIBS MAY DIFFER AS SHOWN

NOTES

1. UNLESS OTHERWISE SPECIFIED AND/OR INDICATED:
   DIMENSIONS ARE TO FACE OF VIEW SHOWN AND AUTOMATICALLY ROUNDED BY COMPUTER FOR INSPECTION (SEE MATH MODEL FOR PRECISE DIMENSIONS). FOR ALL OTHER DIMENSIONS NOT SHOWN BUT REQUIRED FOR TOOL BUILD, SEE MATH MODEL FOR PRECISE TOOL PATH DATA.
2. SEALING RIBS ARE IDENTICAL, EXCEPT AS SHOWN.
3. THIS PART IS NOT CONTROLLED FOR AUTOMATIC FEEDING.
4. THIS PRODUCT IS NOT CATEGORIZED AS AN APPEARANCE ITEM. MINOR IMPERFECTIONS INCLUDING, BUT NOT LIMITED TO, FLOW MARKS, COLOR BLEMISHES, GATE VESTIGE, AND SOFT FLASH THAT DO NOT AFFECT THE FIT, FORM, OR FUNCTION OF THE PART ARE PERMISSIBLE PER DPNP-4.7-CS-01.

PART NO	REV	N/P	STATUS	MAT'L	ALTERNATE MAT'L	COLOR	TYPE	M	P	CAVITY ID	VOLUME
15305172	02	AB	-	SILICONE - METHYL/VINYL	SILICONE - METHYL/VINYL	TAN	GT 280	5.75	2.5	5.2	0.116
15305171	02	AC	-	SILICONE - METHYL/VINYL	SILICONE - METHYL/VINYL	GRN	GT 150	4.5	1.5	4	0.058
15305170	A5	-	-	SILICONE - METHYL/VINYL	SILICONE - METHYL/VINYL	WHT	GT 280	6.35	3.1	5.8	0.156
15305169	01	AG		SILICONE - METHYL/VINYL		GRN	GT 150 MINI	3.9	1.5	3.2 ±0.3 X 4 OVAL	0.050

PROCESS INSPECTION STANDARDS
DIMENSIONS INCLUDED IN [ ] INDICATE CRITICAL DIMENSIONS AS PER "SLANGER LISTS OR DETAILS"

DIMENSIONAL RANGE (MM)								STUFF
FROM	0	10	30	50	70	100	150	200
TO	10	30	50	70	100	150	200	
TOLERANCE UNLESS OTHERWISE SPECIFIED								
±0.13 ±0.25 ±0.38 ±0.51 ±0.76 ±1.00 ±1.27 ±1.50								
FORMAT TOLERANCE ±0								

REFERENCE

THIRD ANGLE PROJECTION

DO NOT SCALE

USE MATH DATA

NX

DELPHI

DELPHI PACKARD ELECTRICAL/ELECTRONIC ARCHITECTURE
WARREN, OH

		DATE
DR		
APVD1	J. CANO	16MY95
APVD2	P. PINA	16MY95
APVD3	C. WATKINS	06JN95
APVD4		
APVD5		

SUBSTANCES OF CONCERN AND RECYCLED CONTENT PER DELPHI (GM/FORD)

MATERIAL: SEE CHART

DRAWING NAME: TAXI SEAL CDL IN CAVITY PLUG

DRAWING NUMBER: 12124630

SIZE	SCALE	TYPE	SHEET NO	OF	REV	N/P
AD	1011	1	OF 1	2 OF	R 07	-

MKD TYPE: PART DRAWING

STYLE

VOLUME (IN³): SEE CHART

SHRINK CHKD

UNLESS OTHERWISE SPECIFIED

THIS DOCUMENT IS TO BE CONSTRUED WITH THE NAM PRN 1000 AND THE NAM PRN 1001 STANDARDS. UNLESS OTHERWISE SPECIFIED, THE GENERAL TOLERANCES AND RELATED DATUMS APPLY WITH THE FOLLOWING EXCEPTIONS: ALL DIMENSIONS MARKED WITH [ ] ARE CRITICAL DIMENSIONS. THE CUSTOMER MUST BE NOTIFIED BEFORE ANY CHANGE IN THE PROCESS OR SERVICE PROCEDURE CAN BEGIN BUT MAY BE GRANTED SUBSEQUENTLY. REPRODUCTION OF THIS DOCUMENT IS PROHIBITED.

ALL DIMENSIONS ARE IN MILLIMETERS

COPYRIGHT FOR DELPHI (GM/FORD)