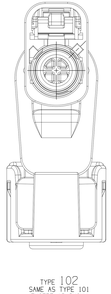

TYPE 102
SAME AS TYPE 101
EXCEPT AS SHOWN

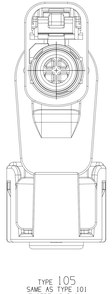

TYPE 105
SAME AS TYPE 101
EXCEPT AS SHOWN

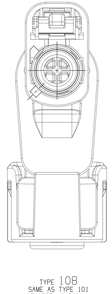

TYPE 108
SAME AS TYPE 101
EXCEPT AS SHOWN

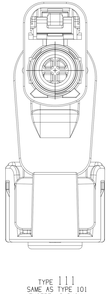

TYPE 111
SAME AS TYPE 101
EXCEPT AS SHOWN

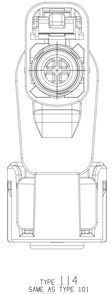

TYPE 114
SAME AS TYPE 101
EXCEPT AS SHOWN

TYPE 103
SAME AS TYPE 101
EXCEPT AS SHOWN

TYPE 106
SAME AS TYPE 101
EXCEPT AS SHOWN

TYPE 109
SAME AS TYPE 101
EXCEPT AS SHOWN

TYPE 112
SAME AS TYPE 101
EXCEPT AS SHOWN

TYPE 104
SAME AS TYPE 101
EXCEPT AS SHOWN

TYPE 107
SAME AS TYPE 101
EXCEPT AS SHOWN

TYPE 110
SAME AS TYPE 101
EXCEPT AS SHOWN

TYPE 113
SAME AS TYPE 101
EXCEPT AS SHOWN

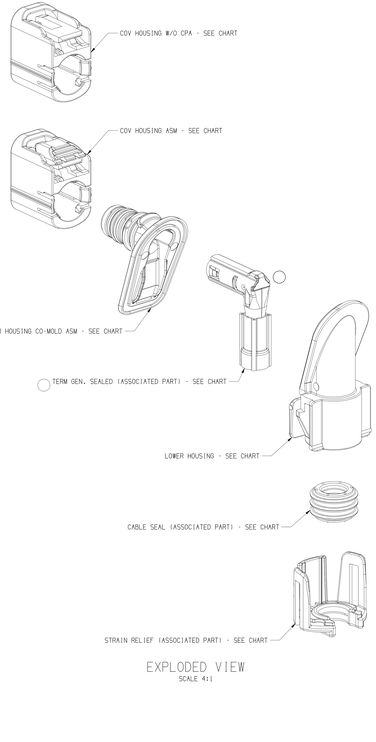

EXPLODED VIEW
SCALE 4:1

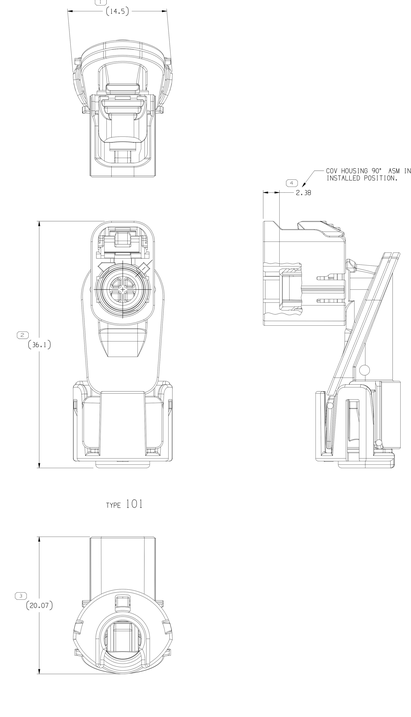

TYPE 101

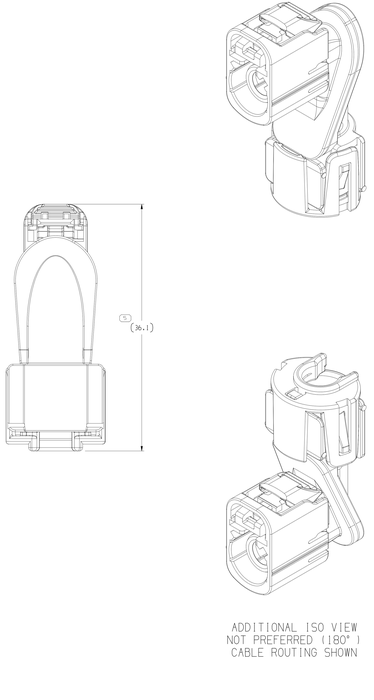

ADDITIONAL ISO VIEW
NOT PREFERRED (180°)
CABLE ROUTING SHOWN

PART NO	REV	N/P	TYPE	CODE	COV HOUSING WITH CPA	COV HOUSING W/O CPA	COLOR HOUSING	COLOR CPA	UPPER HOUSING CO-MOLD ASM	COLOR UPPER HOUSING	COLOR CO-MOLD	LOWER HOUSING	COLOR LOWER HOUSING	STRAIN RELIEF	TERM GEN. SEALED	CABLE SEAL
									ASSOCIATED PARTS							
7544412_2	01	AF	114	Z	-	33341075	WATER BLUE	-	35262139	NATURAL	GREEN	35262329	BLACK	SEE TAXI 35398427	1-SEE TAXI 35010754	SEE TAXI 33359663
7544412_0	01	AF	113	N	-	33341074	GREEN LIGHT	-	35262139	NATURAL	GREEN	35262329	BLACK	SEE TAXI 35398427	1-SEE TAXI 35010754	SEE TAXI 33359663
7544412_8	01	AF	112	M	-	33341073	ORANGE LIGHT	-	35262139	NATURAL	GREEN	35262329	BLACK	SEE TAXI 35398427	1-SEE TAXI 35010754	SEE TAXI 33359663
7544412_7	01	AF	111	L	-	33341072	RED LIGHT	-	35262139	NATURAL	GREEN	35262329	BLACK	SEE TAXI 35398427	1-SEE TAXI 35010754	SEE TAXI 33359663
7544412_6	01	AF	110	K	-	33341071	CURRY	-	35262139	NATURAL	GREEN	35262329	BLACK	SEE TAXI 35398427	1-SEE TAXI 35010754	SEE TAXI 33359663
7544412_4	01	AF	109	I	-	33341070	BEIGE	-	35262139	NATURAL	GREEN	35262329	BLACK	SEE TAXI 35398427	1-SEE TAXI 35010754	SEE TAXI 33359663
7544412_3	01	AF	108	H	-	33341069	VIOLET HEATHER	-	35262139	NATURAL	GREEN	35262329	BLACK	SEE TAXI 35398427	1-SEE TAXI 35010754	SEE TAXI 33359663
7544412_2	01	AF	107	G	-	33341068	BLUE GRAY	-	35262139	NATURAL	GREEN	35262329	BLACK	SEE TAXI 35398427	1-SEE TAXI 35010754	SEE TAXI 33359663
7544412_1	01	AF	106	F	-	33341067	BROWN	-	35262139	NATURAL	GREEN	35262329	BLACK	SEE TAXI 35398427	1-SEE TAXI 35010754	SEE TAXI 33359663
7544412_0	01	AF	105	E	-	33341066	GREEN	-	35262139	NATURAL	GREEN	35262329	BLACK	SEE TAXI 35398427	1-SEE TAXI 35010754	SEE TAXI 33359663
7544412_7	01	AF	104	D	-	33341065	VIOLET CLARET	-	35262139	NATURAL	GREEN	35262329	BLACK	SEE TAXI 35398427	1-SEE TAXI 35010754	SEE TAXI 33359663
7544412_6	01	AF	103	C	-	33341064	BLUE-DARK	-	35262139	NATURAL	GREEN	35262329	BLACK	SEE TAXI 35398427	1-SEE TAXI 35010754	SEE TAXI 33359663
7544412_5	01	AF	102	B	-	33341063	CREAM	-	35262139	NATURAL	GREEN	35262329	BLACK	SEE TAXI 35398427	1-SEE TAXI 35010754	SEE TAXI 33359663
7544412_4	01	AF	101	A	-	33333682	BLACK	-	35262139	NATURAL	GREEN	35262329	BLACK	SEE TAXI 35398427	1-SEE TAXI 35010754	SEE TAXI 33359663
35339741	01	AH	114	Z	35188751	-	WATER BLUE	RED	35262139	NATURAL	GREEN	35262329	BLACK	SEE TAXI 35398427	1-SEE TAXI 35010754	SEE TAXI 33359663
35339740	01	AH	113	N	35188750	-	GREEN LIGHT	RED	35262139	NATURAL	GREEN	35262329	BLACK	SEE TAXI 35398427	1-SEE TAXI 35010754	SEE TAXI 33359663
35339739	01	AH	112	M	35188749	-	ORANGE LIGHT	RED	35262139	NATURAL	GREEN	35262329	BLACK	SEE TAXI 35398427	1-SEE TAXI 35010754	SEE TAXI 33359663
35339738	01	AH	111	L	35188748	-	RED LIGHT	GRAY MED	35262139	NATURAL	GREEN	35262329	BLACK	SEE TAXI 35398427	1-SEE TAXI 35010754	SEE TAXI 33359663
35339737	01	AH	110	K	35188747	-	CURRY	RED	35262139	NATURAL	GREEN	35262329	BLACK	SEE TAXI 35398427	1-SEE TAXI 35010754	SEE TAXI 33359663
35339736	01	AH	109	I	35188745	-	BEIGE	RED	35262139	NATURAL	GREEN	35262329	BLACK	SEE TAXI 35398427	1-SEE TAXI 35010754	SEE TAXI 33359663
35339735	01	AH	108	H	35188744	-	VIOLET HEATHER	RED	35262139	NATURAL	GREEN	35262329	BLACK	SEE TAXI 35398427	1-SEE TAXI 35010754	SEE TAXI 33359663
35339734	01	AH	107	G	35188742	-	BLUE GRAY	RED	35262139	NATURAL	GREEN	35262329	BLACK	SEE TAXI 35398427	1-SEE TAXI 35010754	SEE TAXI 33359663
35339733	01	AH	106	F	35188741	-	BROWN	RED	35262139	NATURAL	GREEN	35262329	BLACK	SEE TAXI 35398427	1-SEE TAXI 35010754	SEE TAXI 33359663
35339732	01	AH	105	E	35188740	-	GREEN	RED	35262139	NATURAL	GREEN	35262329	BLACK	SEE TAXI 35398427	1-SEE TAXI 35010754	SEE TAXI 33359663
35339731	01	AH	104	D	35188738	-	VIOLET CLARET	RED	35262139	NATURAL	GREEN	35262329	BLACK	SEE TAXI 35398427	1-SEE TAXI 35010754	SEE TAXI 33359663
35339730	01	AH	103	C	35188737	-	BLUE-DARK	RED	35262139	NATURAL	GREEN	35262329	BLACK	SEE TAXI 35398427	1-SEE TAXI 35010754	SEE TAXI 33359663
35339729	01	AH	102	B	35188736	-	CREAM	RED	35262139	NATURAL	GREEN	35262329	BLACK	SEE TAXI 35398427	1-SEE TAXI 35010754	SEE TAXI 33359663
35339728	01	AH	101	A	35188735	-	BLACK	RED	35262139	NATURAL	GREEN	35262329	BLACK	SEE TAXI 35398427	1-SEE TAXI 35010754	SEE TAXI 33359663

NOTES

1. UNLESS OTHERWISE SPECIFIED AND/OR INDICATED:

   DIMENSIONS ARE TO FACE OF VIEW SHOWN AND AUTOMATICALLY ROUNDED BY COMPUTER FOR INSPECTION (SEE MATH MODEL FOR PRECISE DIMENSIONS). FOR ALL OTHER DIMENSIONS NOT SHOWN BUT REQUIRED FOR TOOL BUILD, SEE MATH MODEL FOR PRECISE TOOL PATH DATA.

2. THIS PRODUCT IS NOT CATEGORIZED AS AN APPEARANCE ITEM. MINOR IMPERFECTIONS INCLUDING, BUT NOT LIMITED TO; FLOW MARKS, COLOR BLEMISHES, GATE VESTIGE, AND SOFT FLASH THAT DO NOT AFFECT THE FIT, FORM, OR FUNCTION OF THE PART ARE PERMISSIBLE PER EANP_4-3.CS.01_EN.

3. THIS PART ACCEPTS THE FOLLOWING COMPONENTS OR EQUIVALENT:

   OUTER TERMINAL ASM: SEE TERM GEN COLUMN IN CHART
   CABLE SEAL: 33359663

4. FINAL LASER WELDED ASSEMBLY MUST PASS THE 1.0 SCCM LEAK RATE PER ES-A-755.

5. FINAL LASER WELDED ASSEMBLY MUST PASS 90N PULL TEST.

6. "LASER WELDING PROCESS OF UPPER HOUSING TO LOWER HOUSING MUST YIELD TOTAL COLLAPSE OF 0.15 mm - 0.23 mm (0.006" - 0.009").

7. ASSEMBLY MANUAL PN: 35420161

8. NO CRACKS, WHITE STRESS MARKS OR FLASH ALLOWED AFTER WELDING PROCESS.

SYMBOL DEFINITION		MISSING SYMBOLS
A DIMENSION WITHOUT AN INSPECTION REPORT SYMBOL DOES NOT REQUIRE INSPECTION. IT MAY BE CONTROLLED ON THE INDIVIDUAL COMPONENT DRAWING.	TOTAL NO OF INSPECTIONS REQUIRED: 5	NO MISSING SYMBOL NUMBER
	LAST NO. USED: 5	

DWG STATUS					ZONE	REVISION HISTORY	AUTH	DR	APVD	APVD
DATE	SUB	REV	N/P	CHG						
01NOV19	R	01	-	-		ALL PARTS - RELEASED PART DRAWING	550302	CDD	CDD	MLP
10FEB20	R	02	-	-		ALL PARTS - ADDED "TERM GEN." COLUMN	550995	ASC	ASC	MLP
27FEB20	R	03	-	-		35449094-97, 35449100-04, 35449106-08, 35449110 & 35449112 - RELEASED	551128	DRA	MLP	MLP
23JN20	R	04	-	-		ALL PARTS - OUTER TERMINAL ASM WAS 33359721; REMOVED INNER TERMINAL AND FERRULE CALLOUTS FROM ACCEPTABLE COMPONENTS NOTE	551810	AHY	AHY	MLP
17DE20	R	05	-	-		ALL PARTS - ADDED ASM MANUAL PN & FINAL LASER WELDED, LEAK, PULL TEST NOTE AND LASER WELDING PROCESS NOTE	553229	AHY	AHY	RNL
06APZ1	R	06	-	-		ALL PARTS - ADDED "NOT PREFERRED CABLE ROUTING" VIEW	553934	LXA	JAA	RNL
15OC21	R	07	-	-		ALL PARTS - ADDED "NO CRACKS, STRESS MARKS OR FLASH ALLOWED" NOTE	555643	AHY	JAA	RNL
09MR22	R	08	-	-		35339728-41 - UPDATED PART AVAILABILITY WAS "NOT AVAILABLE"	556822	DRA	CDD	JT
20SE23	R	09	-	-		ALL PARTS - REVISED "EXPLODED" VIEW, "CABLE SEAL" COLUMN AND DROPPED "COV HOUSING" & "ASSOCIATED PARTS" COLUMNS	561788	LDD	JAA	RNL
12FE24	R	10	-	-		ALL PARTS - "TERM GEN. SEALED" WAS "TERM GEN." ON COLUMN & CALLOUT AND REVISED TERM COMPONENT ON "EXPLODED" VIEW	563244	MLR	JAA	RNL

(N/A) PROCESS SENSITIVE DIMENSION	REFERENCE	
DIMENSIONS ENCLOSED IN 2 INDICATE REFERENCE DIMENSIONS AND NO TOLERANCE LISTED ARE STANDARDS.		
DIMENSIONAL RANGE (MM)		
FROM > 0 > 6 > 30 > 120 > 315 > 1000 > 2000 > 4000		
TO 6 30 120 315 1000 2000 4000		
TOLERANCE UNLESS OTHERWISE SPECIFIED		
±0.15 ±0.21 ±0.25 ±0.35 ±0.5 ±0.7 ±1.0 ±1.4		
ANGULAR TOLERANCE ±0°		

THIRD ANGLE PROJECTION

DO NOT SCALE
USE MATH DATA

NX

LINE DRAWN THROUGH A PART NUMBER INDICATES THAT PHYSICAL PARTS ARE NOT AVAILABLE FOR ORDERING.

PART NUMBERS THAT DO NOT HAVE A LINE PRESENT INDICATE PHYSICAL PARTS ARE AVAILABLE FOR ORDERING.

CONTACT APTIV SALES TO ASSURE AVAILABILITY OF PARTS.

DWG TYPE: PART DRAWING

STYLE

VOLUME (CM³) | SYSTEM UNIT

UNLESS OTHERWISE SPECIFIED
THIS DOCUMENT IS IN ACCORDANCE WITH ASME Y14.5M-1994 UNLESS OTHERWISE SPECIFIED. ALL DIMENSIONS TOLERANCING AND/OR GEOM. SYMBOLS PERTAINING TO FEATURES MAY BE GAGED SEPARATELY REGARDLESS OF datum REFERENCES.

ALL DIMENSIONS ARE IN MILLIMETERS

© COPYRIGHT 2019 APTIV. ALL RIGHTS RESERVED.

THIS DRAWING IS THE PROPERTY OF APTIV AND CONTAINS APTIV CONFIDENTIAL INFORMATION. NO PART OF THIS DOCUMENT MAY BE USED OR UTILIZATION OF THIS DOCUMENT OR ITS RELATED CAD MATH DATA, NO MAY BE COMMUNICATION OF ANY CONTENT TO OTHERS, WITHOUT EXPRESS AUTHORIZATION, IS PROHIBITED.

APTIV
CONNECTION SYSTEMS
WARREN, OH

		DATE
DR		
APVD	CARLOS DELGADILLO	01NOV19
APVD	CARLOS DELGADILLO	01NOV19
APVD	M. PENN	01NOV19
APVD		
MATERIAL	SUBSTANCES OF CONCERN AND RECYCLED CONTENT PER APTIV (DRAWING)	
FINISH	SEE CHART	

DRAWING NAME: TAXI ASM CONN 1 F FAKRA JACK SLD COAX

DRAWING NUMBER: 35339727

SIZE	SCALE	DRAWN BY	SHEET NO	OF	REV	N/P
A1x3	5:1	2 OF 2	1 OF 2	R	10	-

DRAWING NUMBER: 35339727
A1x3 | SCALE 5:1 | DRAWN BY 2 OF 2 | SHEET NO 1 OF 2 | R | REV 10 | N/P -

35339727
PRINTED: 01/NOV/2021 09:51:05 Sheet 1 of 1
PRINT: 01/NOV/2021 09:51:05 Sheet 1 of 1
Time: 08:08:25