SYMBOL DEFINITION		
A DIMENSION WITHOUT AN INSPECTION REPORT SYMBOL [ ] DOES NOT REQUIRE INSPECTION. IT MAY BE CONTROLLED ON THE INDIVIDUAL COMPONENT DRAWING.	TOTAL NO OF INSPECTIONS REQUIRED	83
	LAST NO. USED	68

MISSING SYMBOLS
NO MISSING SYMBOL NUMBER

DWG STATUS DATE	STS	RC	H/P	DB	ZONE	REVISION HISTORY	AUTH	DR	APVD	APVD 1	APVD 2
050410	R	D1	-	-		CLEARED REVISION COLUMN AND REDRAWN	412436	MAB	JWM	FGO	
070411	R	D2	-	-		UPDATED PDM ATTRIBUTES	413568	MAB	JWM	GEM	

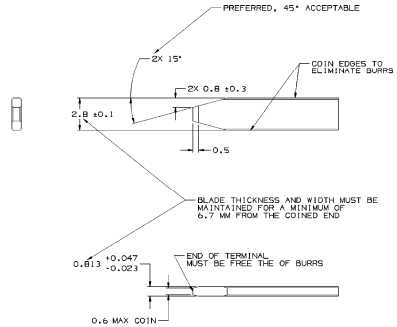

MATERIAL SPECIFICATIONS

RECOMMENDED

BASE METAL - CDA-210, GILDING, EXTRA SPRING TEMPER

PLATING - 0.0050 ±0.0025 MM THICK TIN

MINIMUMS

ELECTRICAL CONDUCTIVITY - ≥ 20% IACS AT 20°C. USE OF A MATERIAL WITH CONDUCTIVITY < 20% IACS MUST BE APPROVED BY PACKARD ELECTRIC MATERIALS ENGENEERING

TENSILE STRENGTH - 407 MPa

PLATING - FOR LOW ENERGY (≤ 5v) AND NON-PASSENGER COMPARTMENT POWER CIRCUITS, 0.0050 ±0.0025 MM THICK TIN. FOR MATERIALS CONTAINING 10% OR MORE ZINC, AN UNDERPLATE OF COPPER 0.0050 ±0.0025 MM THICK IS REQUIRED.

MATING BLADE INFORMATION
SCALE 8:1

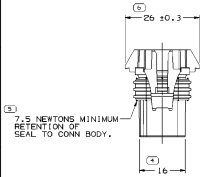

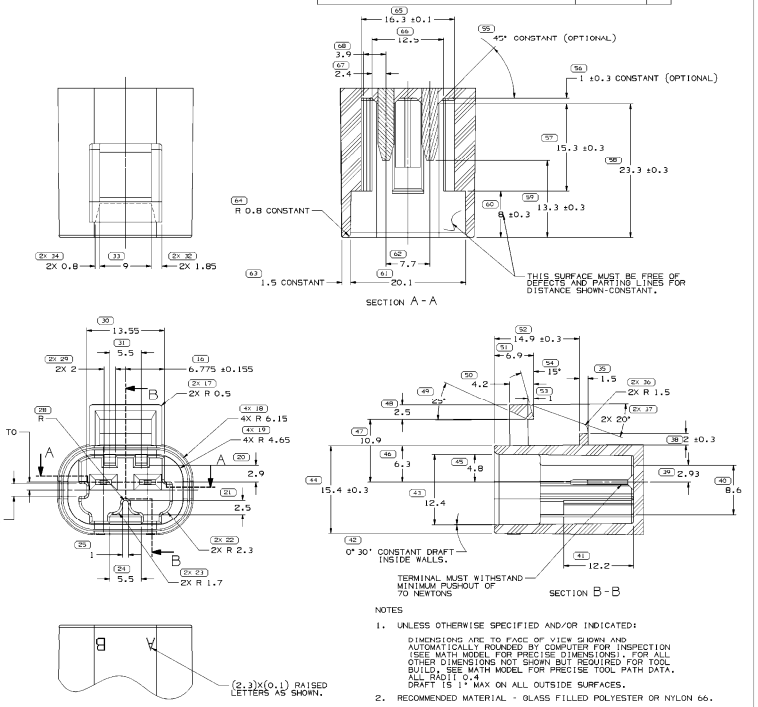

NOTES

1. UNLESS OTHERWISE SPECIFIED AND/OR INDICATED:

   DIMENSIONS ARE TO FACE OF VIEW SHOWN AND AUTOMATICALLY ROUNDED BY COMPUTER FOR INSPECTION (SEE MATH MODEL FOR PRECISE DIMENSIONS). FOR ALL OTHER DIMENSIONS NOT SHOWN BUT REQUIRED FOR TOOL BUILD, SEE MATH MODEL FOR PRECISE TOOL PATH DATA.
   ALL RADII 0.4
   DRAFT IS 1° MAX ON ALL OUTSIDE SURFACES.

2. RECOMMENDED MATERIAL - GLASS FILLED POLYESTER OR NYLON 66.
3. USE TAXI 12084172 FOR INLINE CONNECTOR INFORMATION.

MATING INSERT MOLDED/"PANEL" CONNECTOR INFORMATION
SCALE 4:1
(INSPECTION SYMBOLS SHOWN IN THESE VIEWS ARE FOR REFERENCE ONLY)

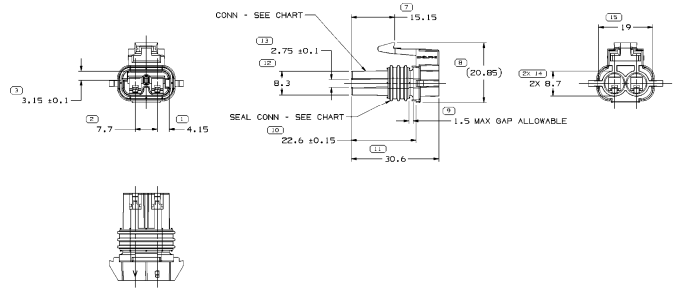

NOTES

1. UNLESS OTHERWISE SPECIFIED AND/OR INDICATED:

   DIMENSIONS ARE TO FACE OF VIEW SHOWN AND AUTOMATICALLY ROUNDED BY COMPUTER FOR INSPECTION (SEE MATH MODEL FOR PRECISE DIMENSIONS). FOR ALL OTHER DIMENSIONS NOT SHOWN BUT REQUIRED FOR TOOL BUILD, SEE MATH MODEL FOR PRECISE TOOL PATH DATA.

2. SEALING CODE 3 - DESIGN WILL PASS SALT FOG AND IMMERSION TEST AFTER CONDITIONING AS SPECIFIED IN ESA-644 (WEATHER-PACK),ESA-710 (METRI-PACK), ESA-650 (UNDERHOOD MICRO-PACK), C-4006 (WORLD CONNECTOR), ETC WHEN MATED TO MATING PART OR EQUIVALENT

3. WHEN PARTS ARE SHIPPED, THEY MUST BE PACKED IN PLASTIC BAGS OR SHIPPING CONTAINERS MUST BE LINED WITH PLASTIC LINERS. BAGS OR LINERS MUST BE SEALED TO AVOID ENTRY OF FOREIGN MATTER.
4. FOR APPLICATION DATA SEE THE APPLICATION DRAWING.
5. THIS PRODUCT IS NOT CATEGORIZED AS AN APPEARANCE ITEM. MINOR IMPERFECTIONS INCLUDING, BUT NOT LIMITED TO, FLOW MARKS, COLOR BLEMISHES, GATE VESTIGE, AND SOFT FLASH THAT DO NOT AFFECT THE FIT, FORM, OR FUNCTION OF THE PART ARE PERMISSIBLE PER DPNF-4.7-C5-01.

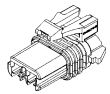

12129487	15300020	12129486
PART NO	SEAL CONN	CONNECTOR

DWG TYPE: PART DRAWING
STYLE
VOLUME (CM³) | SURFACE (DM²)
UNLESS OTHERWISE SPECIFIED
THIS DOCUMENT IS IN ACCORDANCE WITH ISO8015 (1985) AND ISO1101 (1983) AND ISO2692 (1988) AND ISO5458 (1980) GEOMETRICAL TOLERANCING - POSITIONAL TOLERANCING AT MAXIMUM MATERIAL CONDITION UNLESS OTHERWISE STATED
ALL DIMENSIONS ARE IN MILLIMETERS
(N/A) PROCESS INSPECTION STANDARDS
REFERENCES
THIRD ANGLE PROJECTION
DO NOT SCALE
USE MATH DATA
NX

DELPHI
DELPHI PACKARD ELECTRICAL/ELECTRONIC ARCHITECTURE
WARREN, OH

		DATE
DR		
APVD1	J. COLDSNOW	10JL99
APVD2	J. M. DRAPCHO	01NO91
APVD3	T. E. BENT	01NO91
APVD4		
APVD5		

SUBSTANCES OF CONCERN AND RECYCLED CONTENT FOR DELPHI (WARREN)

MATERIAL: SEE DRAWING

DRAWING NAME: ASM CONN 2 F M/P 280 SLD

DRAWING NUMBER: 12129487

SIZE	SCALE	TRACE NO	SHEET NO	STG	REV	NTP
A0	2:1	1 OF 1	1 OF 1	R	D2	-