ASSOCIATED PARTS			
N°	DESIGNATION	CODING	APTIV PN
1	PLUG 890	CODE 1	35084575
		CODE 2	35084602
2	PLUG 890 SW	CODE 1	35254366

DWG STATUS DATE	STG	REV	N/P	CHG	ZONE	REVISION HISTORY	AUTH	DR	APVD 1	APVD 2
17AP19	R	01	-			INITIAL RELEASE		P.K.S	L.EVE	J.FAB

SECTION A-A

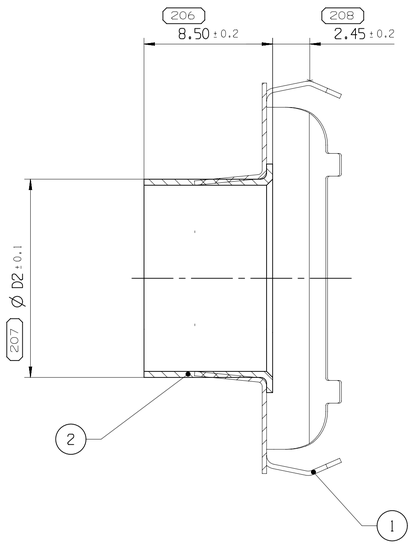

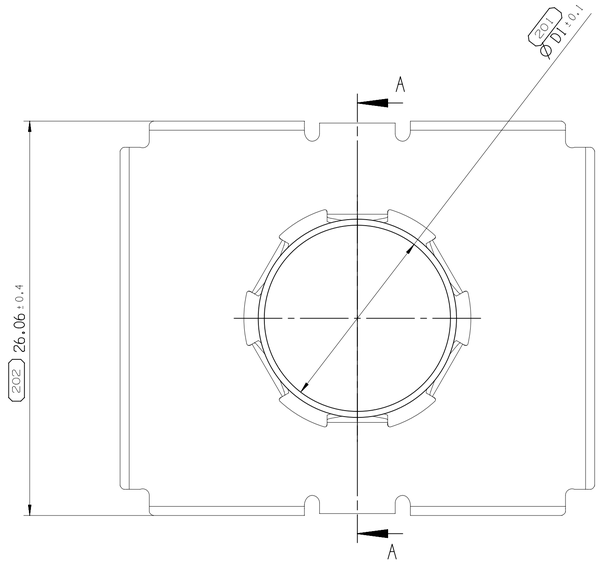

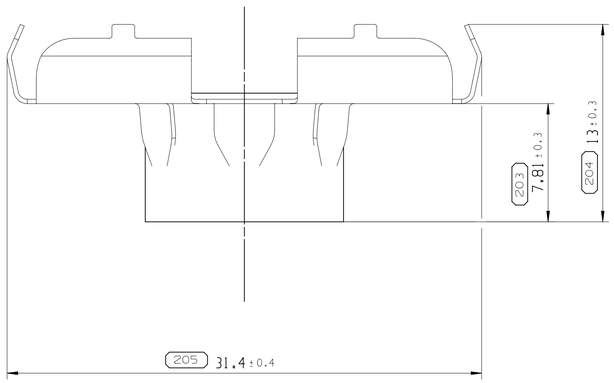

3D VIEW
SCALE 1:1

N°	DESCRIPTION		WIRE SECTION 35-50mm²	WIRE SECTION 50-70mm²	MATERIAL
	RECOVERY SHIELD ASSEMBLY	APTIV PN	35084603	35236787	
1	RECOVERY SHIELD	APTIV PN	35082392	35236446	COPPER ALLOY
2	INNER FERRULE	APTIV PN	35082410	35234889	COPPER ALLOY
		D1	12.3	14.9	
		D2	13.1	16.1	

A ——— LINE DRAWN THROUGH A PART NUMBER INDICATES THAT PHYSICAL PARTS ARE NOT AVAILABLE FOR ORDERING.

PART NUMBERS THAT DO NOT HAVE A LINE PRESENT INDICATE THAT PHYSICAL PARTS ARE AVAILABLE FOR ORDERING.

CONTACT APTIV SALES TO ASSURE AVAILABILITY OF PARTS.

LA LIGNE ——— TRACÉE SUR LA RÉFÉRENCE PIÈCE INDIQUE QUE LA PIÈCE N'EST PAS DISPONIBLE À LA COMMANDE

LES RÉFÉRENCES PIÈCES QUI NE SONT PAS BARRÉES INDIQUENT QUE CELLES-CI SONT DISPONIBLES PHYSIQUEMENT POUR ÊTRE COMMANDÉES

CONTACTER LE SERVICE COMMERCIAL DE APTIV POUR SASSURER DE LA DISPONIBILITÉ DES PIÈCES

SHARP CORNER TOLERANCE

DIM TO CHECK
COTES A VERIFIER

( ) DIM FOR HELP
COTES POUR INFO

THEORETIC DIM
COTES THEORIQUES

DWG TYP
PART DRAWING

WEIGHT (GR): 4.0
VOLUME (CM³): ----
ROUTING

DISTR CODE: D

UNLESS OTHERWISE SPECIFIED

GENERAL TOLERANCES ACCORDING TO:
±0.1
± 3°

GD&T ACCORDING TO:
ISO 1101

REFERENCE

FIRST ANGLE PROJECTION

DO NOT SCALE
USE MATH DATA

CAD NX

•APTIV•

CONNECTION SYSTEMS
Chennai, India

COPYRIGHT 2019 APTIV. ALL RIGHTS RESERVED.

THIS DRAWING IS THE PROPERTY OF APTIV AND CONTAINS APTIV CONFIDENTIAL INFORMATION. THE REPRODUCTION, DISTRIBUTION AND UTILIZATION OF THIS DOCUMENT OR ITS RELATED CAD MATH DATA, AS WELL AS COMMUNICATION OF ANY CONTENT TO OTHERS, WITHOUT EXPRESS AUTHORIZATION, IS PROHIBITED.

CE PLAN EST LE PROPRIETE DE APTIV ET CONTIENT DES INFORMATIONS APTIV CONFIDENTIELLES. LA REPRODUCTION, LA DISTRIBUTION ET L'UTILISATION DE CE DOCUMENT OU DE SES DONNÉES MATHÉMATIQUES CAO, AINSI QUE LA COMMUNICATION DE TOUT CONTENU À AUTRUI, SANS AUTORISATION EXPRESSE EST INTERDITE

		DATE
DR	PRAVEEN KUMAR.S	17AP19
APVD1	E.LAM	17AP19
APVD2	M.VENARD	17AP19
APVD3	J.FABRE	17AP19
APVD4		
APVD5		

SUBSTANCES OF CONCERN AND RECYCLED CONTENT PER APTIV 10949001
MATIÈRES PROSCRITES ET CONTENU RECYCLABLE SELON APTIV 10949001

MATERIAL
SEE TABLE

DRAWING NAME
RECOVERY SHIELD ASSEMBLY
35101376 CUS03

DRAWING NUMBER
35101376

SIZE	SCALE	FRAME NO	SHEET NO	STG	REV	N/P
A1	5:1	1 OF 1	1 OF 1	R	01	-

User: gj446w
Form: gj446w_CUS03-CUS03-S01/01 Date: 20-May-19 Time: 19:40:15
Dwg: gj446w_05202019_16109_123pass.nxr