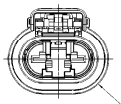
PART-NO.: 15470987

CODE 0

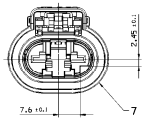
SCALE/MASSTAB 2:1



PART-NO.: 13641532 ②

CODE A

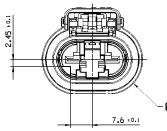
SCALE/MASSTAB 2:1



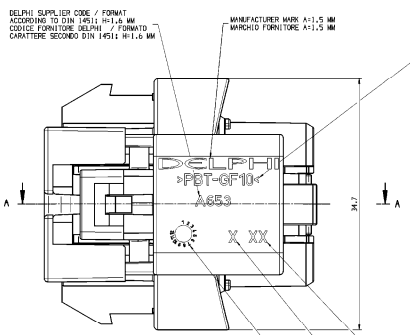
PART-NO.: 13641531 ③

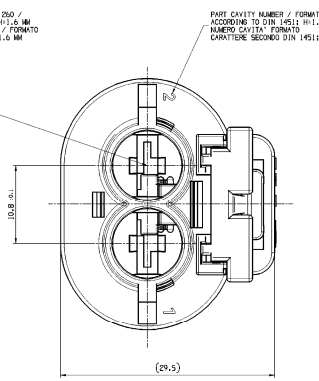
CODE B

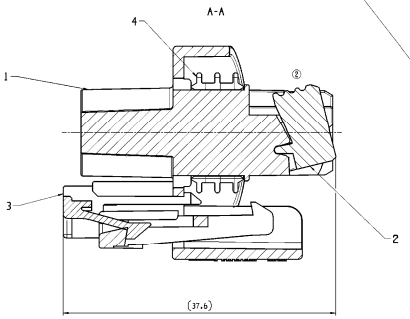
SCALE/MASSTAB 2:1



COD	TITLE / NOME COMPONENTE	PART-NO.	PART-REV	DATE DATA	AMOUNT Q.TA'	CUSTOMER-NO. / CODICE CLIENTE	WATER. AND COL. / MATER. E COL.	RAL	NOTES / NOTE
0	RECEPTACLE HOUSING 2 WAY CONN. PORTA FEMMINE 2 VIE	15470987	02	250035	1	---	---	---	CONDITION OF DELIVERY POS. 1 - 4 ASSEMBLED CONDIZIONE DI FORNITURA POS. 1 - 4 MONTATO
1	RECEPTACLE HOUSING 2 WAY CONN. PORTA FEMMINE 2 VIE	15470985	--	---	1	---	PBT GF10 BK	9005	SHIPMENT ONLY ASSEMBLED DISPONIB. SOLO ASSEMB.
2	PLR	15470983	--	---	1	---	PBT GF20 GY	7001	SHIPMENT ONLY ASSEMBLED DISPONIB. SOLO ASSEMB.
3	CPA	15405481	--	---	1	---	PA6 GB200F10 YE	1021	SHIPMENT ONLY ASSEMBLED DISPONIB. SOLO ASSEMB.
4	HOUSING SEAL GUARNIZIONE CONNETTORE	10721003	--	---	1	---	SILICON 50 SHORE BN	6010	SHIPMENT ONLY ASSEMBLED DISPONIB. SOLO ASSEMB.
③ A	RECEPTACLE HOUSING 2 WAY CONN. PORTA FEMMINE 2 VIE	13641532	01	24M107	1	---	---	---	CONDITION OF DELIVERY POS. 1 - 4 ASSEMBLED CONDIZIONE DI FORNITURA POS. 1 - 4 MONTATO
7	RECEPTACLE HOUSING 2 WAY CONN. PORTA FEMMINE 2 VIE	13641527	--	---	1	---	PBT GF10 BU	5010	SHIPMENT ONLY ASSEMBLED DISPONIB. SOLO ASSEMB.
2	PLR	15470983	--	---	1	---	PBT GF20 GY	7001	SHIPMENT ONLY ASSEMBLED DISPONIB. SOLO ASSEMB.
3	CPA	15405481	--	---	1	---	PA6 GB200F10 YE	1021	SHIPMENT ONLY ASSEMBLED DISPONIB. SOLO ASSEMB.
4	HOUSING SEAL GUARNIZIONE CONNETTORE	10721003	--	---	1	---	SILICON 50 SHORE BN	6010	SHIPMENT ONLY ASSEMBLED DISPONIB. SOLO ASSEMB.
③ B	RECEPTACLE HOUSING 2 WAY CONN. PORTA FEMMINE 2 VIE	13641531	01	24M107	1	---	---	---	CONDITION OF DELIVERY POS. 1 - 4 ASSEMBLED CONDIZIONE DI FORNITURA POS. 1 - 4 MONTATO
④ 8	RECEPTACLE HOUSING 2 WAY CONN. PORTA FEMMINE 2 VIE	13641528	--	---	1	---	MSI GF10 BN	6X0J	SHIPMENT ONLY ASSEMBLED DISPONIB. SOLO ASSEMB.
2	PLR	15470983	--	---	1	---	PBT GF20 GY	7001	SHIPMENT ONLY ASSEMBLED DISPONIB. SOLO ASSEMB.
3	CPA	15405481	--	---	1	---	PA6 GB200F10 YE	1021	SHIPMENT ONLY ASSEMBLED DISPONIB. SOLO ASSEMB.
4	HOUSING SEAL GUARNIZIONE CONNETTORE	10721003	--	---	1	---	SILICON 50 SHORE BN	6010	SHIPMENT ONLY ASSEMBLED DISPONIB. SOLO ASSEMB.
5	DUCON 6.3 X 0.8	12147473	--	---	---	---	N/A	---	OR SIMILAR (CABLE CROSS-SECTION 1.5-2.5 MM²) O SIMILE (SEZIONE CAVO 1.5-2.5 MM²)
6	DUCON 6.3 X 0.8	12147474	--	---	---	---	N/A	---	OR SIMILAR (CABLE CROSS-SECTION 4.0-6.0 MM²) O SIMILE (SEZIONE CAVO 4.0-6.0 MM²)







TOOL CAVITY NUMBER / FORMAT
ACCORDING TO DIN 1451: H=1.6 MM
NUMERO CAVITA' STAMPO / FORMATO
CARATTERE SECONDO DIN 1451: H=1.6 MM

INDEX REPLACEMENT INSERT /
FORMAT ACCORDING TO DIN 1451: H=1.6 MM
CODICE PER INSERTO DI RICAMBIO/
FORMATO CARATTERE SECONDO DIN 1451: H=1.6 MM

DATE INSERT SIMILAR FIRM HASCO Z 485/6/1;
HAS TO BE THE MANUFACTURING DATE
DATARIO SECONDO FA. HASCO Z 485/6/1;
DEVE ESSERE INDICATA LA DATA DI FABBRICAZIONE

REMARKS:
- MAXIMUM DRAFT ANGLE 0°30'
- LETTERS AND GRAVES 0.2 MM RAISED
- MATING DEVICE:
  DRAWING-NO.: 13650362-CDE01-SD1/01
  ③

NOTE:
- MASSIMO ANGOLO DI SFOGLIA 0°30'
- MARCHIATURE IN RILIEVO DI 0.2 MM
- CONTRO PARTI:
  DRAWING-NO.: 13650362-CDE01-SD1/01
  ③

ZONE	TMS STATUS / PRJ SYSTEM	REVISION HISTORY	DATE	NAME	CHECK	STON
	01	INITIAL RELEASE PRIMA EMISSIONE	14APR04	P.ORIZ.	CDR.	D.WIS.
E11	02	ADD MARKING AGGIUNTA SIGLA	250035	P.LES	CDR.	M.SIRP.
JR/KAT	03	ADDED TEXT (SERVICE PART) AGGIUNTO TESTO (PEZZO DI RICAMBIO)				
RES/JT		ADDED PART-NO. 15405481 AS WIRED AGGIUNTO PART-NO. 15405481 COME CABLATO				
RH-L14	AA	1. CPA ADDED 2. CPA ADDED				
A-DR	AB	ADDED: 13641527 CODE BU; 13641528 CODE BN; 13641531 CODE BN; 13641532 CODE BN	24M107	M.PIT./M.ORIZ./Z.REP.		
JT	03 / AC	PART-NO. 13641528 (MATERIAL) ADDED PART-NO. 13641528 (MATERIAL) AGGIUNTO	11JN07	M.PIT./M.ORIZ./M.SIRP.		

SCALE/MASSTAB 1:1



DISCLOSURE OF THIS DOCUMENT, AND RELIANCE UPON IT OR OTHERS AND THE USE OR COMMUNICATION OF THE CONTENTS THEREOF, IS PROHIBITED UNLESS EXPRESSLY AUTHORIZED BY DELPHI. ALL RIGHTS INCLUDING PROPERTY RIGHTS IN THE EVENT OF GRANT OF A PATENT OR REGISTRATION OF A UTILITY MODEL OR DESIGN, ARE RESERVED. UNAUTHORIZED USE MAY EXPOSE YOU TO SIGNIFICANT DAMAGES. ALL OFFERS AND CONTRACTS ARE MADE ONLY BY THE TERMS CONTAINED IN DELPHI'S WRITTEN QUOTATION OR CONTRACT. DELPHI DISCLAIMS ANY OTHER TERMS AND CONDITIONS.

DELPHI

DELPHI PACKARD ELECTRIC SYSTEMS
1 - 10997 COLLEGNO (TURIN)/ITALY

DATE	NAME
DRAWN / GEZ.	24APR04 P.ORIZ.
CHECKED / GEPR.	14APR04 CDR.
APPROVED / FREIG.	250035 P.LES
ORIGINAL / URSPR.	250035 M.SIRP.

MATERIAL / WERKSTOFF: SEE CHART / VEDI TABELLA

TITLE / BENENNUNG:
RECEPTACLE HOUSING 2 WAY
FOR DUCON 6.3 X 0.8
CONN. PORTA FEMMINE 2 VIE
PER DUCON 6.3 X 0.8

PROJECTION	DRAWING NO. / ZEICHNUNG-NR.	PAGE - FROM	STATUS	SCALE/MASS
	15470986	01 - 02	KZUS	5:1

DOCUMENT TYPE / DOKUMENTART: DRAWING / ZEICHNUNG
SIZE / FORMAT: A0

KEY PRODUCT CHARACTERISTICS		TOTAL IN DRAWING	0
SAFETY/COMPLIANCE	FIT/FUNCTION	LAST NO. USED	0
S/C CHECKPOINTS	F/F CHECKPOINTS		

NO. & TYPE	DESCRIPTION	RATIONALE	PTS	ZONE
- -	-	-	-	-

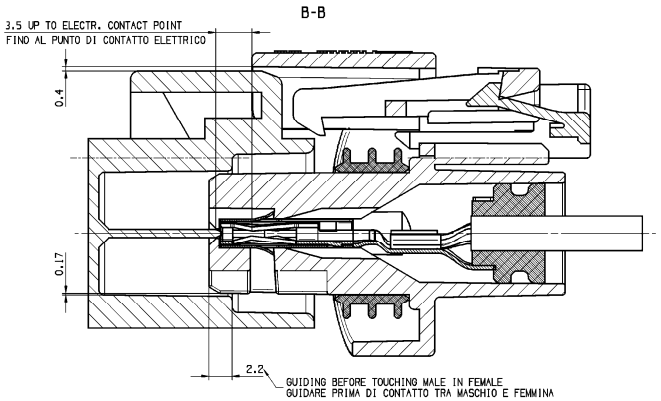
DIN TO CHECK / DATO DA CONTROLLARE
DIN FOR HELP / QUOTE D'AIUTO
THEORETIC DIM / QUOTE TEORICHE
±0.2 MAX
±0.1 MAX

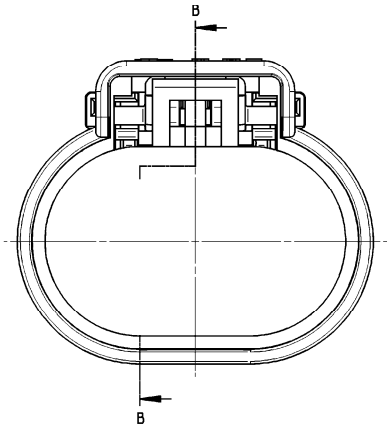
GENERAL TOLERANCES PER ISO 2768-mK
ANGULAR TOLERANCE ±0°30'
TOLERANCE MODELLING ±2°

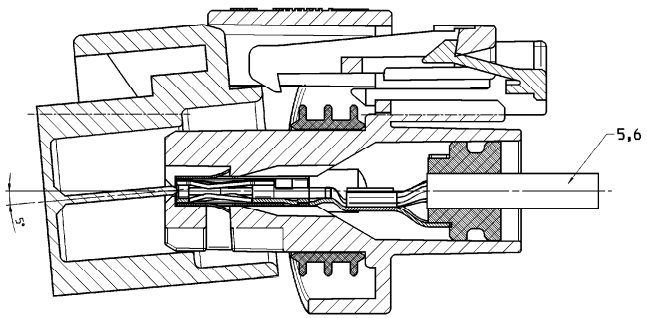
FROM	0.5 TO 3	3 TO 6	6 TO 30	30 TO 120	120 TO 315	315 TO 1000	1000 TO 2000	2000 TO 4000
TOLERANCE UNLESS OTHERWISE SPECIFIED	±0.05	±0.1	±0.15	±0.2	±0.3	±0.5	±0.7	±1.0

TOLERANCES UNLESS OTHERWISE SPECIFIED
TOLERANZEN, SOFERN NICHT EINZELN BEZEICHNET
TOLERANCES SAUF INDICATION CONTRAIRE
TOLERANCIAS SALVO INDICACIONES EN CONTRARIO
TOLERANCES UNLESS OTHERWISE SPECIFIED

DELPHI

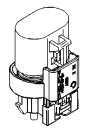






ZONE	DWG STATUS REV	M/P/SW	REVISION HISTORY	DATE	NAME	CHECK	STCHK
	01		INITIAL RELEASE PRIMA EMISSIONE	14APO4	P.GMOZ	CZW.	M.WIS.
	02	--	PLP MODIFIED PLP MODIFICE	250005	P.LES	CZW.	W.SKR.

SCALE/SCALA
1:1



COPYING OF THIS DOCUMENT, AND GIVING IT TO OTHERS AND THE USE OR COMMUNICATION OF THE CONTENTS THEREOF, ARE FORBIDDEN WITHOUT EXPRESS AUTHORITY. OFFENDERS ARE LIABLE TO THE PAYMENT OF DAMAGES. ALL RIGHTS ARE RESERVED IN THE EVENT OF THE GRANT OF A PATENT OR THE REGISTRATION OF A UTILITY MODEL OR DESIGN.
NON È PERMESSA LA RIPRODUZIONE, A TERZI O PROPAGANDA SENZA AUTORIZZAZIONE. ALL'UTILIZZATORE SI RICORDA CHE TUTTI I DIRITTI INDUSTRIALI RELATIVI AI PRODOTTI DELLA DELPHI POSSONO FORMARE OGGETTO DI BREVETTI O MODELLI.
RISERVATI PER LEGGE. DANNI SARANNO PERSEGUITI A TERMINI DI LEGGE.

		NAME	DATE
CAD UNIGRAPHICS	DRAWN BY / DISEGNATO DA	P.GMOZ	13APO4
	CHECKED BY / CONTROLLATO DA	CZW.	14APO4
	ENGINEER OR MFG. APPROV. / APPROVATO DA	W.SKR.	30AUO5

DELPHI
I - 10097 COLLEGNO (TURIN0/ITALY)

VOLUME / WEIGHT (CM³ / GRM) --- / ---
MATERIAL / MATERIALE: SEE CHART / VEDI TABELLA

TITLE/DESIGNAZIONE
TERMINAL/CONNECTOR GUIDING STUDY
FOR 2 WAY DUCON 6.3 X 0.8
TERMINAL/STUDIO GUIDANTE DEL CONNETTORE
PER 2 VIE DUCON 6.3 X 0.8

PROJECTION	DRAWING-NO. / PHASE - FROM	STATUS	SCALE/SCALA
	15470986 02 - 02	KZUS	5:1 1:1

REPLACEMENT FOR/SOSTITUITO DA | DRAWING-REF. NO./DISEGNO RIFERIMENTO/TEIL-NR / ID | FORMAT/A1

DIM TO CHECK QUOTE DA CONTROLLARE	±0.2 MAX	DIMENSIONAL RANGE (MM) CAMPO DELLE DIMENSIONI (MM)
( ) DIM FOR HELP QUOTE D'AIUTO	±0.1 MAX	TOLERANCE UNLESS OTHERWISE SPECIFIED TOLLERANZE SENZA ALTRE SPECIFICAZIONI
THEORETIC DIM QUOTE TEORICHE		ANGULAR TOLERANCE ±2° TOLLERANZE ANGOLARI ±2°

FROM	0	> 20	> 30	> 70	> 100	> 150	> 200	> 250	> 300
TO	20	30	70	100	150	200	250	300	400
	±0.15	±0.2	±0.3	±0.4	±0.5	±0.6	±0.8	±1.0	±1.2

DELPHI

CONTROLLED DOCUMENTS ARE ONLY AVAILABLE ON THE SERVER