	NOTES
-	ON MAIN VIEW ASSEMBLY 33342293 SHOWN (CODE A)
-	DELIVERED CONDITION AS ON MAIN VIEWS - SECONDARY LOCK IN OPEN POSITION
-	ASSEMBLY INSTRUCTION NO.: 35269105-CU571 - PRELIMINARY ASSEMBLY 35269105-CU572 - HARNESS ASSEMBLY 35269102-CU573 - CAR ASSEMBLY
-	MATING PARTS: - 18 WAY 1.5 FEMALE CONNECTOR ASM DWG-NO.: 35195559 - FIXING SLIDE APTIV DWG-NO.: 33294416 (HT DWG-NO.: 17-1492-001-CS6) - BACKSHELL 90 DEG APTIV DWG-NO.: 35024552 (HT DWG-NO.: 17-2277-001-CS6) - BACKSHELL 180 DEG APTIV DWG-NO.: 35024553 (HT DWG-NO.: 17-1491-001-CS6) - PROTECTION CAP APTIV DWG-NO.: 35462944 (HT DWG-NO.: 17-2273-001-CS6) ①
-	MATING TERMINAL SYSTEM: - 1.5 TERMINAL DWG-NO.: 15396739 MAX WIRE CROSS SECTION: 1.0MM² RECOMMENDATION FOR 1.5 TERMINAL WITH WIRE CROSS SECTION 1.5MM² - USE COMBINATION: TE TERMINAL: TAB 1.6, DWG NO.: 1703278-5 SEAL: 2112323-1 ① MAX INSULATION CRIMP DIMENSIONS: HEIGHT: 3.40; WIDTH: 3.40
1	APTIV LOGO
2	MATERIAL NAME ACCORDING TO VDA 260
3	DATE INSERT
4	TOOL CAVITY NUMBER
5	INDEX REPLACEMENT INSERT
6	PART CAVITY NUMBER
7	MOVING DISTANCE OF SECONDARY LOCK

POSITION	1								2		3	4
NAME	HOUSING PANAL MOUNT								SECONDARY LOCK		SL SEAL	FIXING SEAL
MATERIAL	PBT GF30 FR17				PBT GF30				PBT GF30 FR17	PBT GF30	LSR 50 SHORE	LSR 70 SHORE
COLOR:	BLACK	GREY	GREEN	BLUE	BLACK	GREY	GREEN	BLUE	ORANGE	YELLOW	REDDISH-BROWN	REDDISH-BROWN
PART-NO.:	33325410	33325411	33325409	33325408	33347504	33347890	33347866	33347871	33325395	33347487	33283927	33283924

ASSEMBLY-NO.:	PART-REV	CODING	MATERIAL/WEIGHT	BLACK	GREY	GREEN	BLUE	BLACK	GREY	GREEN	BLUE	ORANGE	YELLOW	REDDISH-BROWN	REDDISH-BROWN
33342293	01	CODE A	ALL PARTS VO / 37,5	-	---	---	---	---	---	---	---	---	---	---	---
33342294	01	CODE B		-	1	---	---	---	---	---	---	1	---	1	1
33342295	01	CODE C		-	---	1	---	---	---	---	---	1	---	1	1
33342300	01	CODE D		-	---	---	1	---	---	---	---	1	---	1	1
~~33347872~~	01	CODE A	ALL PARTS NVO / 36,45	-	---	---	---	---	---	---	---	---	---	---	---
~~33349684~~ ①	01	CODE B		-	---	---	---	---	---	---	---	1	---	1	1
~~33349696~~	01	CODE C		-	---	---	---	---	---	---	---	1	---	1	1
~~33349700~~	01	CODE D		-	---	---	---	---	---	---	---	1	---	1	1

DWG STATUS DATE	STG	REV	N/P	CHG	ZONE	REVISION HISTORY	AUTH	DR	APVD 1	APVD 2
28NO18	R	01				INITIAL RELEASE		A.RAJ	P.NAJ	M.GRU
15MR19	R	01	AA		L14 F12	REFERENCE HELLERMANN TYTON DWG-NO. ADDED REFERENCE HELLERMANN TYTON PART-NO. ADDED		K.FAR	M.GRU	K.PIT
27OC20	R	01	AB		L14 L9 K14	PROTECTION CAP APTIV DWG-NO.: 35462944 WAS 35274879 PART AVAILABILITY FOR PART NUMBERS 33347872, 33349684, 33349696, 33349700 UPDATED NOTES UPDATED		P.NAJ	M.GRU	M.SKR

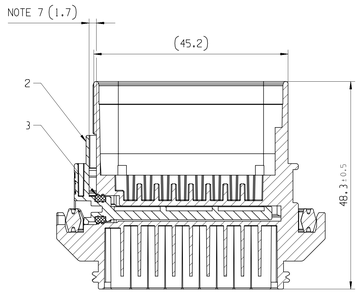

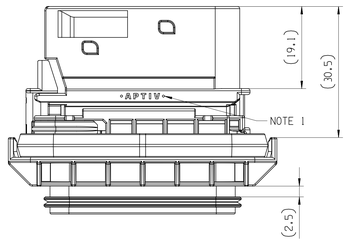

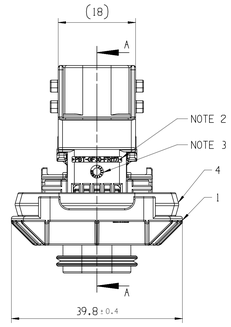

POSSIBILITY OF MOUNTING FROM BOTH DIRECTIONS

SCALE: 1:1

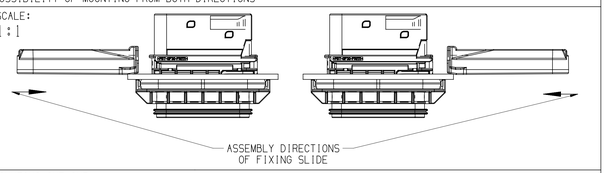

MOUNTING CUT OUT

VERSION WITH POLARISATION

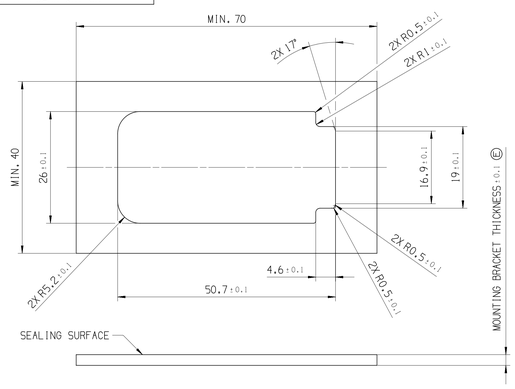

VERSION WITHOUT POLARISATION

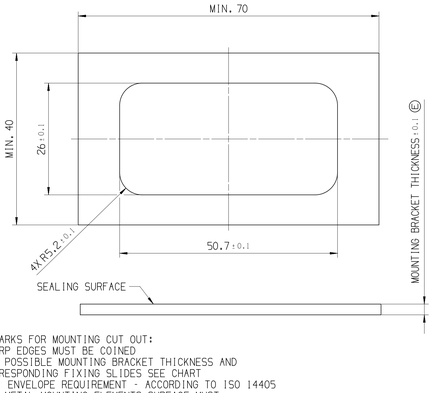

REMARKS FOR MOUNTING CUT OUT:
- SHARP EDGES MUST BE COINED
- FOR POSSIBLE MOUNTING BRACKET THICKNESS AND CORRESPONDING FIXING SLIDES SEE CHART
- Ⓔ: ENVELOPE REQUIREMENT - ACCORDING TO ISO 14405
- FOR METAL MOUNTING ELEMENTS SURFACE MUST MEET ROUGHNESS Ra MAX 1.8µm
- FOR PLASTIC MOUNTING ELEMENTS SURFACE MUST MEET MIN CLASS 24 ROUGHNESS FROM VDI 3400.

①

MOUNTING BRACKET THICKNESS	FIXING SLIDE APTIV/HT PART-NO.:		COLOR
-	PBT GF30 FR17	PBT GF30	-
1MM	~~33366508~~	~~33366507~~	NATURAL
1.5MM	33341425 / 151-02405	33348137 / 151-02404	GREY
2MM	~~33366509~~	~~33366506~~	BLUE
2.5MM	33283296 / 151-02409	33348133 / 151-02408	RED
3MM	33325396 / 151-02413	33348135 / 151-02412	YELLOW
3.5MM	33341424 / 151-02417	33348136 / 151-02416	GREY
4MM	~~33366510~~	~~33366505~~	GREEN

CODE A

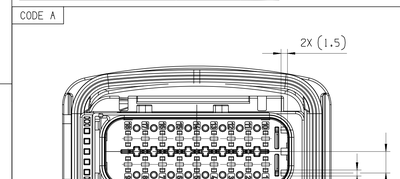

CODE C

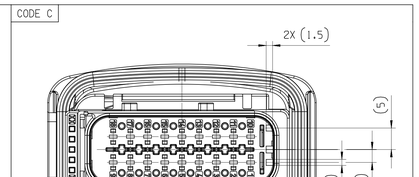

CODE B

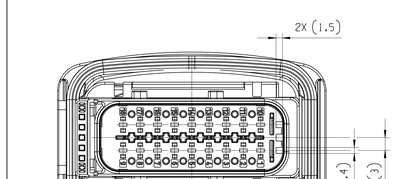

CODE D

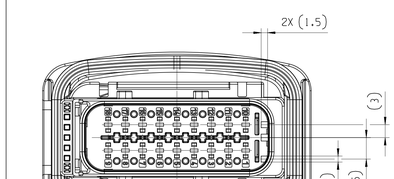

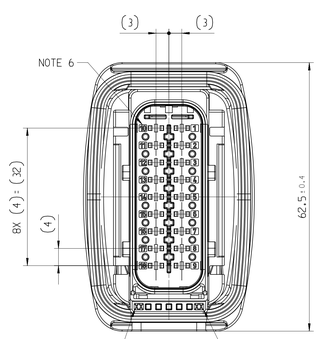

SCALE 1:1

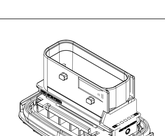

A LINE DRAWN THROUGH A PART NUMBER INDICATES THAT PHYSICAL PARTS ARE NOT AVAILABLE FOR ORDERING.

PART NUMBERS THAT DO NOT HAVE A LINE PRESENT INDICATE THAT PHYSICAL PARTS ARE AVAILABLE FOR ORDERING.

CONTACT APTIV SALES TO ASSURE AVAILABILITY OF PARTS.

R 0.1 MAX
R 0.2 MAX
SHARP CORNER TOLERANCE

	DIMENSIONAL RANGE (MM)									CHART E1
DIM TO CHECK	FROM TO	> 0 20	> 20 30	> 30 70	> 70 100	>100 150	>150 200	>200 250	>250 300	> 300 400
DIM FOR HELP	TOLERANCE UNLESS OTHERWISE SPECIFIED									
THEORETIC DIM		±0.15	±0.2	±0.3	±0.4	±0.5	±0.6	±0.8	±1	±1.2
	ANGULAR TOLERANCE ±2°									

DWG TYP: PART DRAWING
WEIGHT (GR): SEE CHART
VOLUME (CM³): ---
ROUTING
DISTR CODE: D
UNLESS OTHERWISE SPECIFIED

GENERAL TOLERANCES ACCORDING TO: SEE CHART

GD&T ACCORDING TO: ISO 1101

REFERENCE

FIRST ANGLE PROJECTION

DO NOT SCALE
USE MATH DATA

CAD NX

•APTIV•

CONNECTION SYSTEMS
KRAKÓW, POLAND

COPYRIGHT 2018 APTIV. ALL RIGHTS RESERVED.

THIS DRAWING IS THE PROPERTY OF APTIV AND CONTAINS APTIV CONFIDENTIAL INFORMATION; THE REPRODUCTION, DISTRIBUTION AND UTILIZATION OF THIS DOCUMENT ONLY ON THE RELATED CAD/MATH DATA, AS WELL AS COMMUNICATION OF ANY CONTENT TO OTHERS, WITHOUT EXPRESS AUTHORIZATION, IS PROHIBITED.

TEN RYSUNEK JEST WŁASNOŚCIĄ APTIV I ZAWIERA POUFNE INFORMACJE POWIELANE, ROZPOWSZECHNIANE I WYKORZYSTYWANE TEGO DOKUMENTU LUB ZWIĄZANYCH Z NIM DANYCH CAD, JAK RÓWNIEŻ PRZEKAZYWANIE INNYM JAKIEKOLWIEK ICH ZAWARTOŚCI BEZ NADANIA WYRAŹNYCH UPRAWNIEŃ, JEST ZABRONIONE

		DATE
DR	A.RAJEEV	27NO18
APVD1	P.NAJDUCH	28NO18
APVD2	M.GRUDZEWSKI	29NO18
APVD3		
APVD4		
APVD5		

SUBSTANCES OF CONCERN AND RECYCLED CONTENT PER APTIV 10949001
SUBSTANCJE NIEBEZPIECZNE I PONTORNIE PRZETWARZANE ORESLA APTIV 10949001

MATERIAL: SEE CHART

DRAWING NAME: 18 WAY 1.5 CTCS PANEL MOUNT MALE ASSEMBLY

DRAWING NUMBER: 35195557

SIZE	SCALE	FRAME NO	SHEET NO	STG	REV	N/P
A0	2:1	1 OF 1	1 OF 1	R	01	AB

User: c25gzk
Date: 29-paź-20 Time: 13:12:22
Docs: 35195557.CS6.01.01.prt
Dwg: 35195557.CS6.01.01.dwg