	NOTE
1	APTIV PRODUCT SPECIFICATION: FE PS 17 015
2	APTIV USER'S MANUAL: PU 236
3	HEADER SCREWED ON INTERFACE DESCRIBED ON DRAWING: 35102116-CUS02 APPLICABLE FOR THREAD FORMING SCREW M4x18 EJOT IN CASE OF STANDARD M4 SCREW, PLEASE CONTACT APTIV ENG. TEAM
4	Ø 8 MALE TERMINAL SCREWING ON BUSBAR WITH M5 SCREW SCREWING TORQUE : 4.7 N.m ± 15 %. SCREW CLASS 8.8
5	2 BUMPS DESIGNED FOR 2° DRAFT ON THE DIE CAST (INNER SURFACE)

DWG STATUS DATE	STG	REV	N/P	CHG	ZONE	REVISION HISTORY	AUTH	DR	APVD 1	APVD 2
09DE17	R	01				INITIAL RELEASE		J.MUG	L.R.S	J.FAB
25JA18	R	01	AA	--	E8	DIM 7 REFERENCE CHANGED		L.R.S	L.DIA	J.FAB
01FE18	R	02	--	--		DRAWING UPDATED		L.R.S	L.DIA	J.FAB
16FE18	R	02	AA	--	F6 D5 C6 C8 D9	DIM 20 AND DATUM "A" REFERENCE MODIFIED DIM 10,13,14&15 WAS REMOVED DIM 4 TOLEREANCE WAS 0.15 & DIM 25 GD&T TOL. WAS 0.3 DIM 5 TOLEREANCE WAS 0.15 DIM 6 WAS 43.5mm		L.R.S	L.DIA	J.FAB
13MR19	R	02	AB	--	F8 F5 G6 E12 E5 D5	DIM 22 WAS REMOVED BASIC DIMENSION ADDED DIM 29 ADDED CHARACTERISTICS TABLE ADDED DIM 19 DELETED, FOR REFERENCE ONLY DIM 38,39&40 ADDED DRAWING UPDATED TO APTIV FORMAT		S.BER	E.LAM	J.FAB

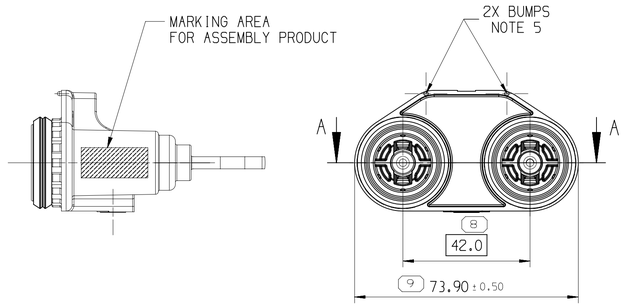

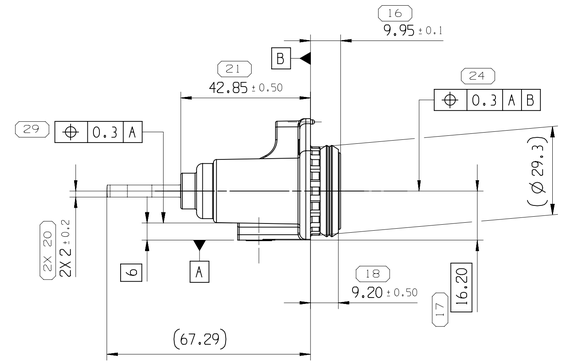

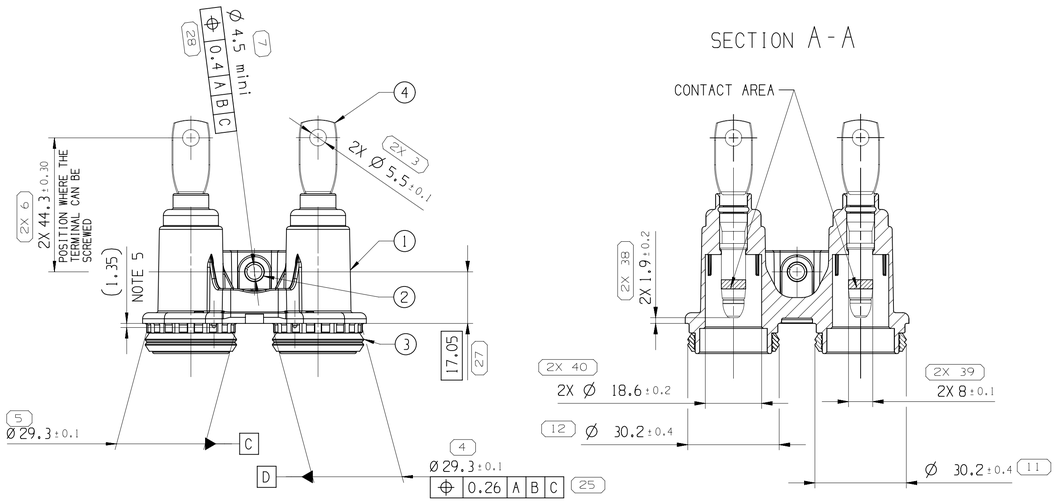

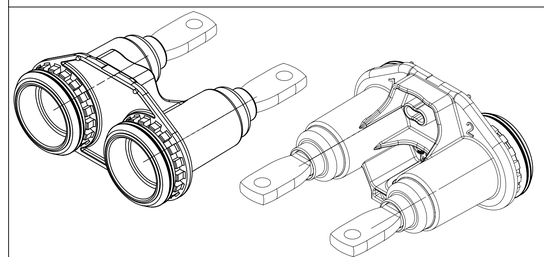

TABLEAU CARACTERISTIQUES / PRESTATIONS ATTENDUES *TABLE OF CHARACTERISTICS / FUNCTIONAL FEATURES REQUESTED*			
N° DE LA CARACTERISTIQUE A GARANTIR POUR ASSURER LA PRESTATION *CHARACTERISTIC NUMBER TO GUARANTEE IN ORDER TO ENSURE THE FUNCTIONAL FEATURE*	PRESTATION ATTENDUE FUNCTIONAL FEATURES REQUEST		
	BRANCHEMENT (GUIDAGE ET POLARISATION) *MATING (GUIDING AND POLARIZATION)*	ETANCHEITE *SEALING*	LIAISON CONTACT ELECTRIQUE *ELECTRICAL CONTINUITY*
28,25	X		
11,12		X	
6,25,38,39,40			X

ASSEMBLY VERSION	COLOR	ORANGE		
	APTIV P/N	35099880	35099885	
	REVISION	01	01	
	FOLLOWING FRONT VIEW	NO PRODUCTION		
1 OUTER HEADER	QUANTITY	1		
	COLOR	ORANGE		
	MATERIAL	PA6 GF 30	PA6 GF 30 V0	
	APTIV P/N	35096677	35096776	
2 METALLIC INSERT FOR SCREW M4	QUANTITY	1		
	COLOR	-		
	MATERIAL	CARBON STEEL		
	APTIV P/N	35163123		
3 UNIT SEAL BOX	QUANTITY	2		
	COLOR	GREY MEDIUM		
	MATERIAL	SILICON		
	APTIV P/N	35099765		
4 PIN 8MM	QUANTITY	2		
	COLOR	-		
	MATERIAL	COPPER ALLOY SILVER PLATED 3-6 µm		
	APTIV P/N	35099782		
5 UNIT SEAL HVIL	QUANTITY	1	N/A	
	COLOR	BLUE		
	MATERIAL	SILICON		
	APTIV P/N	33501739		

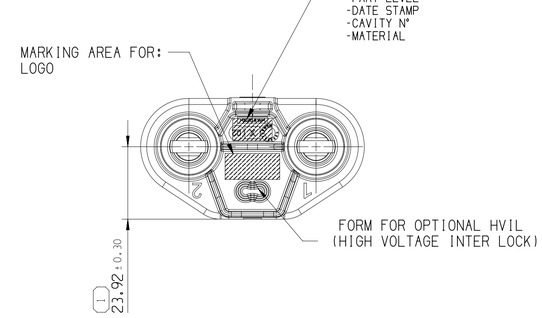

A ——— LINE DRAWN THROUGH A PART NUMBER INDICATES THAT PHYSICAL PARTS ARE NOT AVAILABLE FOR ORDERING.

PART NUMBERS THAT DO NOT HAVE A LINE PRESENT INDICATE THAT PHYSICAL PARTS ARE AVAILABLE FOR ORDERING.

CONTACT APTIV SALES TO ASSURE AVAILABILITY OF PARTS.

LA LIGNE ——— TRACÉE SUR LA RÉFÉRENCE PIÈCE INDIQUE QUE LA PIÈCE N'EST PAS DISPONIBLE À LA COMMANDE.

LES RÉFÉRENCES PIÈCES QUI NE SONT PAS BARRÉES INDIQUENT QUE CELLES-CI SONT DISPONIBLES PHYSIQUEMENT POUR ÊTRE COMMANDÉES

CONTACTER LE SERVICE COMMERCIAL DE APTIV POUR S'ASSURER DE LA DISPONIBILITÉ DES PIÈCES

SHARP CORNER TOLERANCE

DIM TO CHECK / COTES A VERIFIER	DIMENSIONAL RANGE (MM)									CHART E1
( ) DIM FOR HELP / COTES POUR INFO	FROM	> 0	> 20	> 30	> 70	>100	>150	>200	>250	>300
	TO	20	30	70	100	150	200	250	300	400
	TOLERANCE UNLESS OTHERWISE SPECIFIED									
THEORETIC DIM / COTES THEORIQUES		±0.15	±0.2	±0.3	±0.4	±0.5	±0.6	±0.8	±1	±1.2
	ANGULAR TOLERANCE ±2°									

DWG TYP: CUSTOMER PART DRAWING
WEIGHT (GR): 83 Max
VOLUME (CM³): -
ROUTING
DISTR CODE: D

UNLESS OTHERWISE SPECIFIED

GENERAL TOLERANCES ACCORDING TO: SEE CHART

GD&T ACCORDING TO: SEE CHART

REFERENCE

FIRST ANGLE PROJECTION

DO NOT SCALE

USE MATH DATA

CAD NX

•APTIV•

CONNECTION SYSTEMS
Chennai, India

COPYRIGHT 2017 APTIV. ALL RIGHTS RESERVED.
REVISED 2019

THIS DRAWING IS THE PROPERTY OF APTIV AND CONTAINS APTIV CONFIDENTIAL INFORMATION. THE REPRODUCTION, DISTRIBUTION AND UTILIZATION OF THIS DOCUMENT OR ITS RELATED CAD MATH DATA, AS WELL AS COMMUNICATION OF ANY CONTENT TO OTHERS, WITHOUT EXPRESS AUTHORIZATION, IS PROHIBITED.

CE PLAN EST LE PROPRIETE DE DELPHI CORPORATION ET CONTIENT DES INFORMATIONS DELPHI CONFIDENTIELLES. LA REPRODUCTION, LA DISTRIBUTION ET L'UTILISATION DE CE DOCUMENT OU DE SES DONNÉES MATHÉMATIQUES CAD, AINSI QUE LA COMMUNICATION DE TOUT CONTENU À AUTRUI, SANS AUTORISATION EXPRESSE EST INTERDITE.

		DATE
DR	J.MUGUNTHAN	09DE17
APVD1	L.R.SURESH	09DE17
APVD2	L.DIAZ	09DE17
APVD3	S.LACOTE	09DE17
APVD4	J.FABRE	09DE17
APVD5		

SUBSTANCES OF CONCERN AND RECYCLED CONTENT PER APTIV 10949001
MATIERES PROSCRITES ET CONTENU RECYCLABLE SELON DELPHI 10949001

MATERIAL: SEE TABLE

DRAWING NAME: HEADER DM RCS800 2W 35099881-CUS02

DRAWING NUMBER: 35099881

SIZE	SCALE	FRAME NO	SHEET NO	STG	REV	N/P
A1	1:1	1 OF 1	1 OF 2	R	02	AB

Sheet: 1/2Sheet: 35099881-CUS02-S01/02A Date: 26-Mar-19 Time: 14:08:01
Page: 1/2Page: 1/2Page: 1/2