SYMBOL DEFINITION			MISSING NUMBERS
THE NUMBER INSIDE THE SYMBOL ( ) CORRESPONDS TO THE NUMBER ON THE INSPECTION REPORT FOR THIS DRAWING/PART NUMBER	TOTAL NO. OF SYMBOLS ON DRAWING	17	
	LAST NO. USED	20	

DWG STATUS					ZONE	REVISION HISTORY	AUTH	DR	APVD 1	APVD 2
DATE	STG	REV	N/P	CHG						
11AU03	R	C2	-			CLEARED REV COL, MAT'L SPEC WAS R0071754, 26.65 ±0.3 WAS 26.65 ±0.15 & ADDED NOTES (2 PLCS)	Z44404	RAO	CMZ	FR

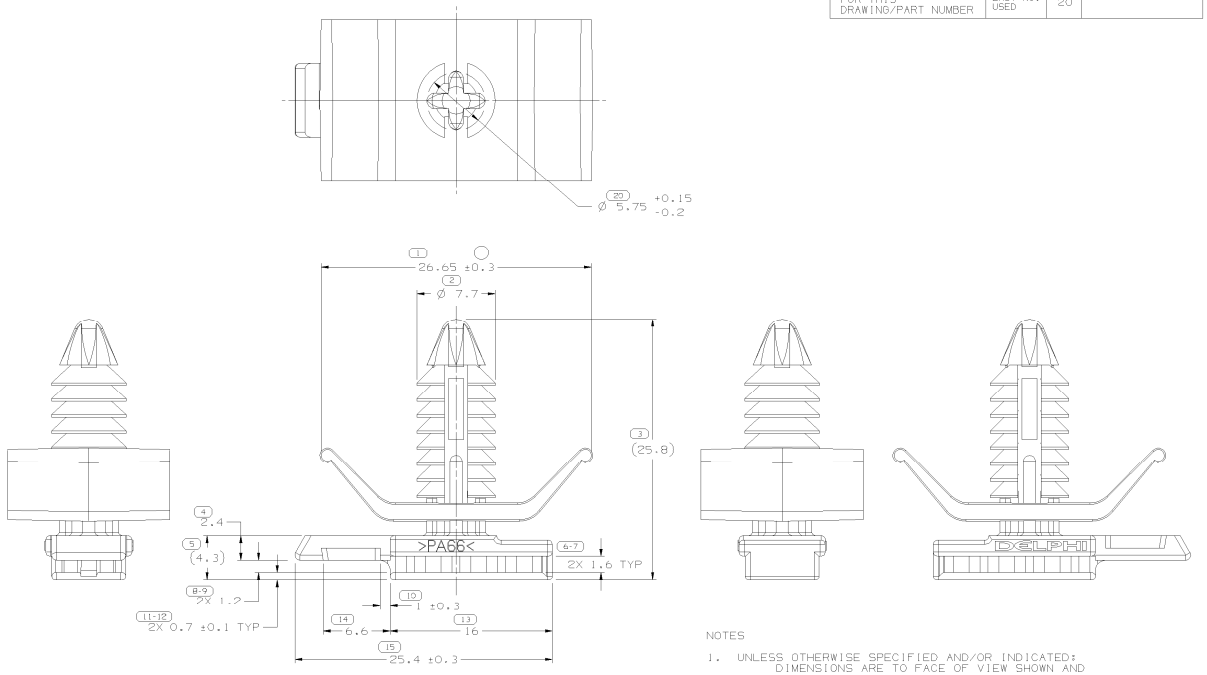

NOTES

1. UNLESS OTHERWISE SPECIFIED AND/OR INDICATED:
   DIMENSIONS ARE TO FACE OF VIEW SHOWN AND AUTOMATICALLY ROUNDED BY COMPUTER FOR INSPECTION (SEE MATH MODEL FOR PRECISE DIMENSIONS). FOR ALL OTHER DIMENSIONS NOT SHOWN BUT REQUIRED FOR TOOL BUILD, SEE MATH MODEL FOR PRECISE TOOL PATH DATA.
2. MATERIAL RECYCLING CODE >PA66< PER SAE J1344. (1.3)X(0.1) RAISED CHARACTERS AS SHOWN TO BE LOCATED ON ANY EXTERIOR SURFACE. OPTIONAL CONSTRUCTION TO BE NO MATERIAL RECYCLING CODE.
3. MATING COMPONENTS OR EQUIVALENT:
   CONNECTOR 12110781
4. (1.3)X(0.1) RAISED DELPHI CORPORATE BRAND TO BE LOCATED ON ANY EXTERIOR SURFACE, PREFERABLY VISIBLE AT FINAL ASSEMBLY. OPTIONAL CONSTRUCTION TO BE "PED" OR NO LOGO.
5. RECOMMENDED HOLE SIZE - Ø6.35 IN 8 MAX THICK STOCK.
6. THIS PART IS NOT CONTROLLED FOR AUTOMATIC FEEDING.

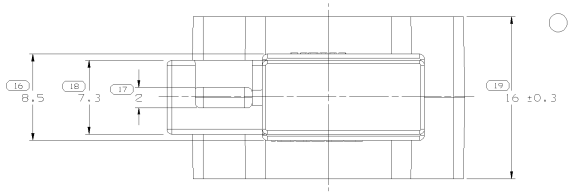

19	PROCESS SENSITIVE DIMENSION

DIMENSIONS ENCLOSED IN ( ) INDICATE REFERENCE DIMENSIONS AND NO TOLERANCE LIMITS ARE ESTABLISHED

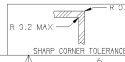

DIMENSIONAL RANGE (MM)											CHART E1
FROM	> 0	> 20	> 30	> 70	>100	>150	>200	>250	>300		
TO	20	30	70	100	150	200	250	300	400		
TOLERANCE UNLESS OTHERWISE SPECIFIED											
	±0.15	±0.2	±0.3	±0.4	±0.5	±0.6	±0.8	±1	±1.2		
ANGULAR TOLERANCE ±2°											

DWG TYPE	
PART DRAWING	
STYLE	
VOLUME (CM³) 1.553	DISTR CODE
ROUTING 6900	

UNLESS OTHERWISE SPECIFIED
THIS DOCUMENT IS IN ACCORDANCE WITH ASME Y14.5M-1994 AS AMENDED BY THE GM GLOBAL DIMENSIONING AND TOLERANCING ADDENDUM (2021). "SEPARATE PATTERNS OF FEATURES MAY BE GAGED SEPARATELY REGARDLESS OF DATUM REFERENCES."

ALL DIMENSIONS ARE IN MILLIMETERS.

REFERENCE 701,001 12110341

THIRD ANGLE PROJECTION

DO NOT SCALE
USE MATH DATA

UNIGRAPHICS

DELPHI

DELPHI PACKARD ELECTRIC SYSTEMS
WARREN, OH

		DATE
DR		
APVD1	BRIAN MADISON	01MY01
APVD2	BRIAN MADISON	01MY01
APVD3	BRIAN HAMILL	09MY01
APVD4		
APVD5		

SUBSTANCES OF CONCERN AND RECYCLED CONTENT PER DELPHI 10949001

MATERIAL
M3592001 PA66 HS IM BLK

DRAWING NAME
MOUN CLIP 6.63 N/A CONN

DRAWING NUMBER
12110783

SIZE	SCALE	FRAME NO	SHEET NO	STG	REV	N/P
A1	5:1	1 OF 1	1 OF 1	R	C2	-

Master:MEXLR283:C4581-S01 Date: 22-Oct-05 Time: 03:04