SYMBOL DEFINITION		
A DIMENSION WITHOUT AN INSPECTION REPORT SYMBOL [ ] DOES NOT REQUIRE INSPECTION. IT MAY BE CONTROLLED ON THE INDIVIDUAL COMPONENT DRAWING.	TOTAL NO OF INSPECTIONS REQUIRED	15
	LAST NO. USED	15

MISSING SYMBOLS
NO MISSING SYMBOL NUMBER

DWG STATUS DATE	STS	REC	N/P	CHG	ZONE	REVISION HISTORY	AUTH	DR	APVD 1	APVD 2
05APL13	R	01	-	-	-	ALL PARTS - RELEASED PART DRAWING	421980	CAR	JAW	LES
31MY13	R	02	-	-	-	15537613-14 - REMOVED "LOCK SECONDARY SLC" FROM ASM: 15526972-73 - RELEASED	422808	MF	JAA	LES M
26JN13	R	03	-	-	-	15537613-14 - OBSOLETE; ALL PARTS - UPDATED LOCK CPA	423112	JAR	JAR	LES
26NO13	R	04	-	-	-	15526972-73 - UPDATED LOCK CPA	424793	DCH	DCH	LES
14FE14	R	05	-	-	-	15526972-73 - UPDATED LOCK CPA; MAIN "TYPE" ON DRAWING WAS 101 AND REVISED GRAPHICS	425548	MC	JAA	LES
24MR15	R	06	-	-	-	15526972-73 - UPDATED PART AVAILABILITY	429234	MNM	JNM	JSM
09MY15	R	07	-	-	-	15526972-73 - DIM 19.09 +0.3/-0.15 WAS 19.09	429561	JSM	ERG	JSM

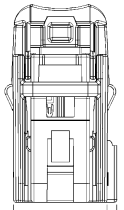

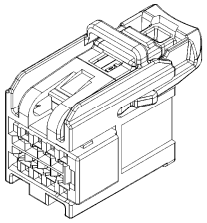

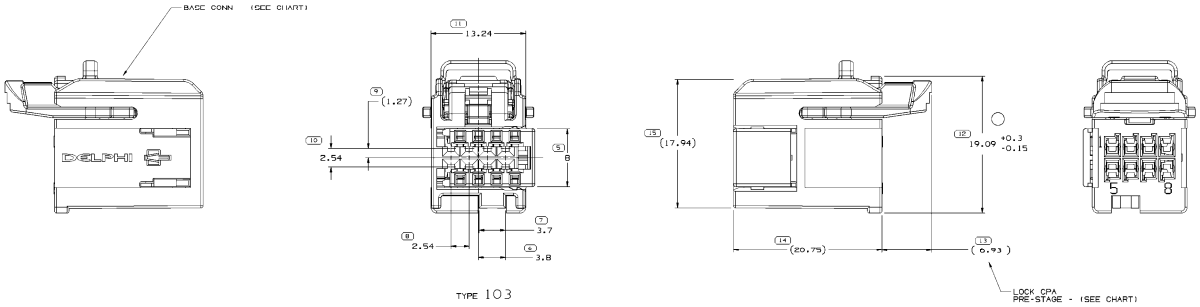

TYPE 103

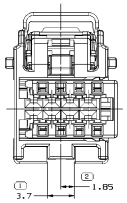

TYPE 104
SAME AS TYPE 103
EXCEPT AS SHOWN

NOTES

1. UNLESS OTHERWISE SPECIFIED AND/OR INDICATED:

   DIMENSIONS ARE TO FACE OF VIEW SHOWN AND AUTOMATICALLY ROUNDED BY COMPUTER FOR INSPECTION (SEE MATH MODEL FOR PRECISE DIMENSIONS). FOR ALL OTHER DIMENSIONS NOT SHOWN BUT REQUIRED FOR TOOL BUILD, SEE MATH MODEL FOR PRECISE TOOL PATH DATA.

2. THIS PRODUCT IS NOT CATEGORIZED AS AN APPEARANCE ITEM. MINOR IMPERFECTIONS INCLUDING, BUT NOT LIMITED TO, FLOW MARKS, COLOR BLEMISHES, GATE VESTIGE, AND SOFT FLASH THAT DO NOT AFFECT THE FIT, FORM, OR FUNCTION OF THE PART ARE PERMISSIBLE PER DPNP-4.7-CS-01.

3. FOR APPLICATION DATA SEE THE INDIVIDUAL APPLICATION DRAWINGS.

4. TO ASSURE CORRECT TERMINAL POSITION, AN ELECTRICAL TEST HOLDER APPROVED BY BOTH THE DELPHI PACKARD NORTH AMERICA PRODUCT LINE ENGINEER AND ASSEMBLY TOOLING BUSINESS UNIT MUST BE USED. FAILURE TO USE AN APPROVED TEST HOLDER MAY RESULT IN UNSEATED TERMINALS.

PART NO	REV	N/P	TYPE	BASE CONN	LOCK SECONDARY SLC	CPA	EWCAP MATING INFO
15526973	04	AB	104	13942895	13842568	15526971	064-U-008-2-A02
15526972	04	AB	103	13942894	13842568	15526971	064-U-008-2-A02
15537614	02	AA	102	13942895	-	15526971	064-U-008-2-A02
15537613	02	AA	101	13942894	-	15526971	064-U-008-2-A02

A PRELIMINARY LINE DRAWN THROUGH A PART NUMBER INDICATES THAT PHYSICAL PARTS ARE NOT AVAILABLE FOR ORDERING.

PART NUMBERS THAT DO NOT HAVE A LINE PRESENT INDICATE THAT PHYSICAL PARTS ARE AVAILABLE FOR ORDERING.

CONTACT ENGINE SALES TO ASSURE AVAILABILITY OF PARTS.

DWG TYPE: PART DRAWING

STYLE:

VOLUME (CM³): SURFACE (CM²):

UNLESS OTHERWISE SPECIFIED
THIS DOCUMENT IS TO BE DISCLOSED WITH CARE IN A MANNER THAT WILL NOT DAMAGE DELPHI'S INTERESTS. DISCLOSURE OUTSIDE OF DELPHI'S OPERATIONS OR RETURNING IT BY OTHER REPRESENTATIVES OF DELPHI REPRESENTED.

(N/A) PROCESS INSPECTION STANDARDS

STANDARDS: DPS-2003 W/ J 1.1 (AS/AC1)
DIMENSIONS: DPS-2003 W/ J 1.1 (AS/AC1)
UNITS: MM (DECIMAL)

ATMOSPHERICAL PARAMETERS														
PRESS	> 0	> 50	> 10	> 70	> 100	> 150	> 200	> 250	> 300	> 400				
TEMP	20	0	25	75	100	150	200	250	300	400				
TOLERANCE FOR DIMENSIONS (UNLESS OTHERWISE SPECIFIED)														
±0.25	±0.1	±0.2	±0.3	±0.5	±1.0	±2.0	±1	±1.5						
ANGULAR TOLERANCE: ±0.5°														

ALL DIMENSIONS ARE IN MILLIMETERS

REFERENCE

THIRD ANGLE PROJECTION

DO NOT SCALE

USE MATH DATA

NX

COPYRIGHT 2013 DELPHI AUTOMOTIVE SYSTEMS LLC
ALL RIGHTS RESERVED.
THIS DRAWING IS THE PROPRIETARY PROPERTY OF DELPHI AND CONTAINS DETAILS CONFIDENTIAL INFORMATION. THE DRAWING MUST NOT BE REPRODUCED IN WHOLE OR IN PART WITHOUT WRITTEN PERMISSION FROM DELPHI, AS WELL AS TRANSMITTED OR MADE AVAILABLE TO OTHERS WITHOUT EXPRESS AUTHORIZATION FROM DELPHI.

DELPHI
DELPHI PACKARD ELECTRICAL/ELECTRONIC ARCHITECTURE

		DATE
DR		
APVD1	C. RODRIGUEZ	05APL13
APVD2	J. VILLAMIL	05APL13
APVD3	E. SOLANO	05APL13
APVD4		
APVD5		

SUBSTANCES OF CONCERN AND RECYCLED CONTENT PER DELPHI (EMBEDD)

MATERIAL: SEE CHART

DRAWING TITLE: TAXI ASM CONN B F OCS 0.64

DRAWING NUMBER: 15537627

SIZE	SCALE	TRANS NO	SHEET NO	STD	REV	N/P
AD	5:1	1	1 OF 2	1 OF 1	R 07	-