| SYMBOL DEFINITION | | | MISSING NUMBERS |
|---|---|---|---|
| THE NUMBER INSIDE THE SYMBOL ( ) CORRESPONDS TO THE NUMBER ON THE INSPECTION REPORT FOR THIS DRAWING/PART NUMBER | TOTAL NO. OF SYMBOLS ON DRAWING | 7 | |
| | LAST NO. USED | 10 | |

| DWG STATUS DATE | STG | REV | N/P | CHG | ZONE | REVISION HISTORY | AUTH | DR | APVD 1 | APVD 2 |
|---|---|---|---|---|---|---|---|---|---|---|
| 14MR02 | R | 01 | - | - | | ALL PARTS - ADDED DELPHI LOGO & MATERIAL RECYCLING CODE NOTES AND REVISED MATERIAL SPEC | 222523 | HH | EDV | GMC |

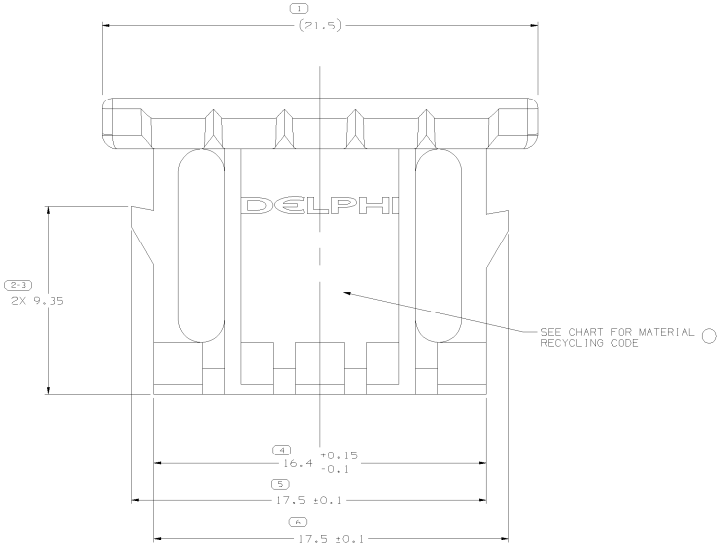


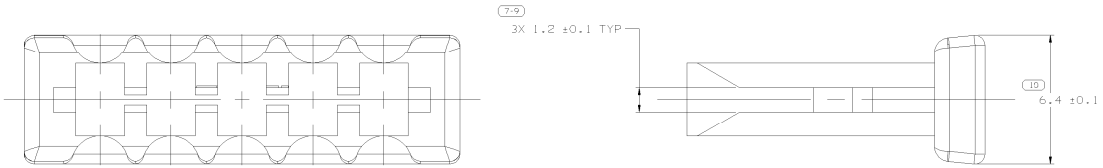


NOTES

1. UNLESS OTHERWISE SPECIFIED AND/OR INDICATED:
   DIMENSIONS ARE TO FACE OF VIEW SHOWN AND AUTOMATICALLY ROUNDED BY COMPUTER FOR INSPECTION. (SEE MATH MODEL FOR PRECISE DIMENSIONS.) FOR ALL OTHER DIMENSIONS NOT SHOWN BUT REQUIRED FOR TOOL BUILD, SEE MATH MODEL FOR PRECISE TOOL PATH DATA. PART IS SYMMETRIC ABOUT ITS CENTERLINE.

2. MATING COMPONENTS OR EQUIVALENT:
   CONNECTOR 12064770

3. MATERIAL RECYCLING CODE PER SAE J1344. (2.3)X(0.1) RAISED CHARACTERS AS SHOWN TO BE LOCATED ON ANY EXTERIOR SURFACE. OPTIONAL CONSTRUCTION TO BE NO MATERIAL RECYCLING CODE.

4. (2.3)X(0.1) RAISED DELPHI CORPORATE BRAND TO BE LOCATED ON ANY EXTERIOR SURFACE, PREFERABLY VISIBLE AT FINAL ASSEMBLY. OPTIONAL CONSTRUCTION TO BE "PED" OR NO LOGO.

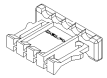

| PART NO | REV | N/P | STATUS | MATERIAL SPECIFICATION & COLOR | MAT'L RECYCLING CODE | VOL CM³ |
|---|---|---|---|---|---|---|
| 15324082 | A2 | - | | M3592012 PA66 HS IM GRA LT | PA66 | 0.565 |
| 12064772 | D4 | - | | M4695002 PBT BLK | PBT | 0.565 |

R 0.2 MAX — SHARP CORNER TOLERANCE

R 0.1 MAX

| DIMENSIONAL RANGE (MM) FROM | TO | CHAMFER | | | | | | | |
|---|---|---|---|---|---|---|---|---|---|
| 0 | 20 | >20 30 | >30 70 | >70 100 | >100 150 | >150 200 | >200 250 | >250 300 | >300 400 |
| TOLERANCE UNLESS OTHERWISE SPECIFIED | | | | | | | | | |
| ±0.15 | ±0.2 | ±0.3 | ±0.4 | ±0.5 | ±0.6 | ±0.8 | ±1 | ±1.2 | |

ANGULAR TOLERANCE ±2°

4 PROCESS SENSITIVE DIMENSION

DIMENSIONS ENCLOSED IN ( ) INDICATE REFERENCE DIMENSIONS AND NO TOLERANCE LIMITS ARE ESTABLISHED

REFERENCE

THIRD ANGLE PROJECTION

DO NOT SCALE

USE MATH DATA

DWG TYPE: PART DRAWING

STYLE

VOLUME (CM³): SEE CHART

DISTR CODE

ROUTING: 6900

UNLESS OTHERWISE SPECIFIED

THIS DOCUMENT IS IN ACCORDANCE WITH ASME Y14.5M-1994 AS AMENDED BY THE DM GLOBAL DIMENSIONING AND TOLERANCING ADDENDUM - 1997. ALL GEOMETRIC TOLERANCES AND RELATED DATUMS APPLY RFS. ROLE #1:INSPECT FORM AT MMC: DOES NOT APPLY WHEN RELATIONSHIP BETWEEN FEATURES IS CRITICAL. FOR FEATURE SIZE OR LOCATION TOLERANCES, SEPARATE REFERENCE CALLOUTS MAY BE BASED SEPARATELY, REGARDLESS OF DATUM REFERENCE.

DELPHI

DELPHI PACKARD ELECTRIC SYSTEMS
WARREN, OH

| | DATE |
|---|---|
| DR | |
| APVD1 H. HERNANDEZ | 11JN98 |
| APVD2 G. MACIAS | 11JN98 |
| APVD3 | |
| APVD4 | |
| APVD5 | |

SUBSTANCES OF CONCERN AND RECYCLED CONTENT PER DELPHI 10949001

MATERIAL: SEE CHART

DRAWING NAME: TAXI TPA M/P LSO

DRAWING NUMBER: 15324459

| SIZE | SCALE | FRAME NO | SHEET NO | STG | REV | N/P |
|---|---|---|---|---|---|---|
| A1 | 10:1 | 1 OF 1 | 1 OF 1 | R | 01 | - |