POS	TITLE	PART-NO.:	PART-REV	DATE	AMOUNT	MATERIAL	SIM. RAL	NOTES
	RECEPTACLE HOUSING 6 WAY ASSEMBLY	15344052	01	10N099	---	---	---	CONDITION OF DELIVERY POS. 1-2 ASSEMBLED
1	RECEPTACLE HOUSING 6 WAY	15345254	--	---	1	PA6 BLK	9005	ONLY ASSEMBLED PARTS AVAILABLE
2	HOUSING SEAL	10718067	--	---	1	SILICON GRN	---	ONLY ASSEMBLED PARTS AVAILABLE

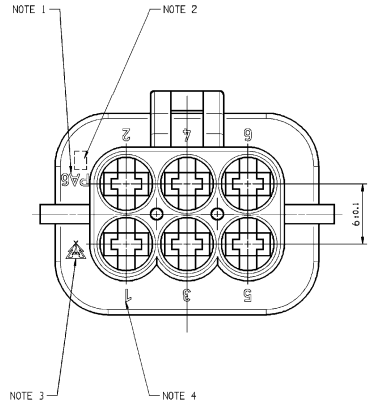

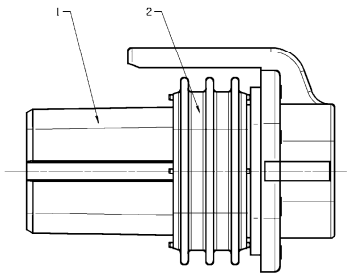

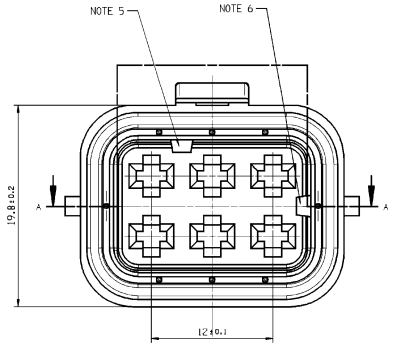

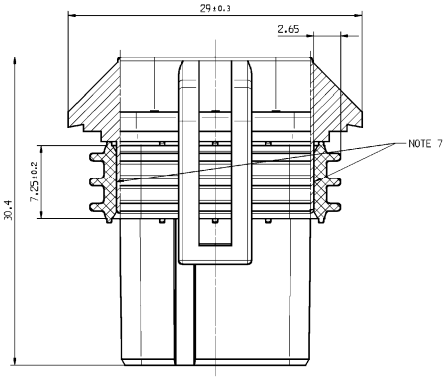

MATING DEVICE:
SCALE: 2:1

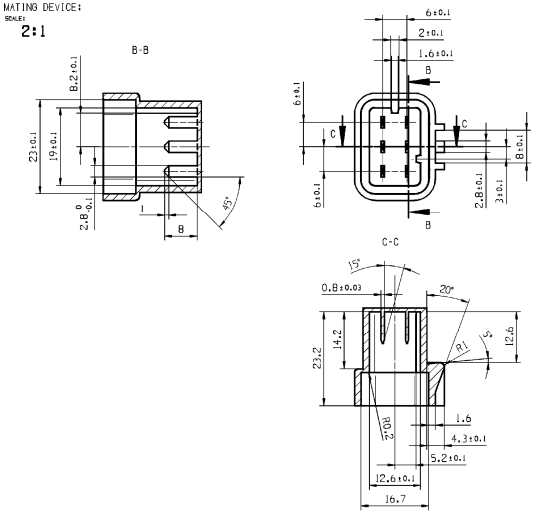

NOTES	
--	LETTERS AND ENGRAVINGS 0.1 MM RAISED FORMAT ACCORDING TO DIN 1451
--	MATING PART: LOCKING CAP PART-NO.: 10719356
--	TERMINAL SYSTEM: 6X DUCON 2.8X0.8
1	MATERIAL NAME; H=1.2 MM
2	TOOL CAVITY NUMBER; H=1.6 MM
3	MANUFACTURER MARK X=2 MM
4	PART CAVITY NUMBER; H=1.2 MM
5	CODING FEATURE
6	PROTECTION AGAINST DISLOCATING
7	SEALING SURFACE MUST BE FREE OF DEFECTS

A — LINE DRAWN THROUGH A PART NUMBER INDICATES THAT PHYSICAL PARTS ARE NOT AVAILABLE FOR ORDERING.

PART NUMBERS THAT DO NOT HAVE A LINE PRESENT INDICATE THAT PHYSICAL PARTS ARE AVAILABLE FOR ORDERING.

CONTACT DELPHI SALES TO ASSURE AVAILABILITY OF PARTS.

R 0.1 MAX
R 0.2 MAX
SHARP CORNER TOLERANCE

DIM TO CHECK	DIMENSIONAL RANGE (MM)										SHEET 1:1
	FROM	> 0	> 20	> 30	> 70	> 100	> 150	> 200	> 250	> 300	
	TO	20	30	70	100	150	200	250	300	400	
I DIM FOR HELP	TOLERANCE UNLESS OTHERWISE SPECIFIED										
THEORETIC DIM	±0.15	±0.2	±0.3	±0.4	±0.5	±0.6	±0.8	±1	±1.2		
	ANGULAR TOLERANCE ±2°										

DWG STATUS DATE	STG	REV	N/P	CHG	ZONE	REVISION HISTORY	AUTH	DR	APVD 1	APVD 2
07SE16	R	01				INITIAL RELEASE		A.RAC	M.SKR	P.LES

SCALE: 1:1

DWG TYP: PART DRAWING
WEIGHT (GR)
VOLUME (CM³)
ROUTING
DISTR CODE

UNLESS OTHERWISE SPECIFIED

GENERAL TOLERANCES ACCORDING TO: SEE CHART

GD&T ACCORDING TO: ISO 1101

REFERENCE: FIRST ANGLE PROJECTION

DO NOT SCALE
USE MATH DATA

DELPHI

DELPHI PACKARD ELECTRICAL/ELECTRONIC ARCHITECTURE
KRAKOW, POLAND

COPYRIGHT 2016 DELPHI CORPORATION AND/OR ITS AFFILIATES.
ALL RIGHTS RESERVED.

THIS DRAWING IS THE PROPERTY OF DELPHI CORPORATION AND CONTAINS DELPHI CONFIDENTIAL INFORMATION. THE REPRODUCTION, DISTRIBUTION AND UTILIZATION OF THIS DOCUMENT OR ITS RELATED CAD MATH DATA, AS WELL AS COMMUNICATION OF ANY CONTENT TO OTHERS, WITHOUT EXPRESS AUTHORIZATION, IS PROHIBITED.

TEN RYSUNEK JEST WŁASNOŚCIĄ DELPHI CORPORATION I ZAWIERA POUFNE INFORMACJE PRZEMYSŁOWE. REPRODUKOWANIE I WYKORZYSTYWANIE TEGO DOKUMENTU LUB ZWIĄZANYCH Z NIM DANYCH CAD JAK RÓWNIEŻ PRZEKAZYWANIE INNYM OSOBOM OD ZAWARTEGO BEZ ZGODNA WYRAŻONYCH UPRAWNIEŃ JEST ZABRONIONE

		DATE
DR	A.RACZKA	06SE16
APVD1	M.SIKORA	07SE16
APVD2	P.LESNIAK	08SE16
APVD3		
APVD4		
APVD5		

SUBSTANCES OF CONCERN AND RECYCLED CONTENT PER DELPHI 10N49001
SUBSTANCJE NIEBEZPIECZNE I POWTORNIE PRZETWARZANE DELPHI 10N49001

MATERIAL: SEE CHART

DRAWING NAME: RECEPTACLE HOUSING 6 WAY FOR DUCON 2,8X0,8

DRAWING NUMBER: 15344052

SIZE	SCALE	FRAME NO	SHEET NO	STG	REV	N/P
A1	5:1	1 OF 1	1 OF 1	R	01	

CONTROLLED DOCUMENTS ARE ONLY AVAILABLE ON THE SERVER