SYMBOL DEFINITION		
A DIMENSION WITHOUT AN INSPECTION REPORT SYMBOL ( ) DOES NOT REQUIRE INSPECTION. IT MAY BE CONTROLLED ON THE INDIVIDUAL COMPONENT DRAWING.	TOTAL NO OF INSPECTIONS REQUIRED	21
	LAST NO. USED	12

MISSING SYMBOLS
NO MISSING SYMBOL NUMBER

DWG STATUS DATE	STR	REV	N/P	CHG	ZONE	REVISION HISTORY	AUTH	DR	APVD I.E.	APVD E.E.
05MRC2	R	01	-	-		ALL PARTS - CREATED PD, ADDED NOTE AND REVISED MATL SPEC	222189	RH	RH	ET
28JN05	R	02	-	-		ALL PARTS - REDRAWN TO LATEST PD FORMAT	269490	AMG	AMG	GD
16NOV5	R	03	-	-		ALL PARTS - DIM #2 WAS 10X 7.2 ±0.2 TYP	274570	ACD	FRG	GD
16NOV5	R	04	-	-		ALL PARTS - REVISED NOTE #2 AND DIM #2 WAS 10X 7.2 +0.25/-0.35 TYP	274762	JAR	FRG	GD

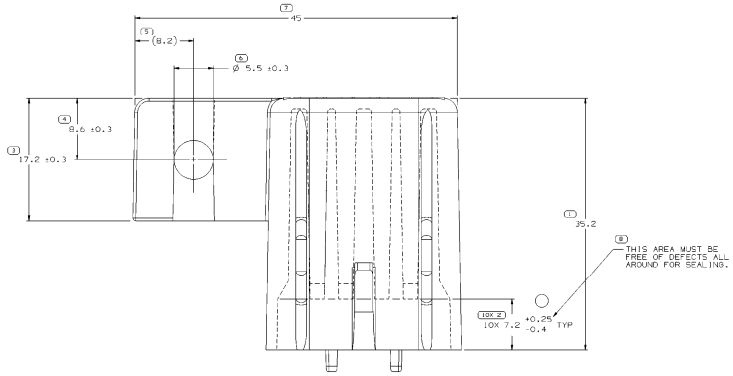

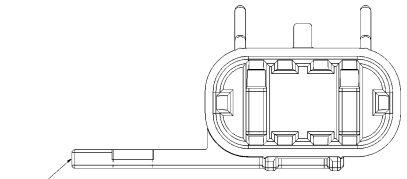

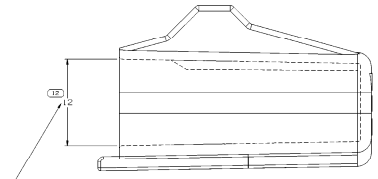

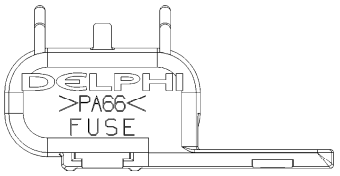

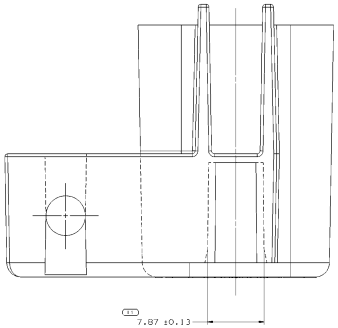

NOTES

1. UNLESS OTHERWISE SPECIFIED AND/OR INDICATED:

   DIMENSIONS ARE TO FACE OF VIEW SHOWN AND AUTOMATICALLY ROUNDED BY COMPUTER FOR INSPECTION (SEE MATH MODEL FOR PRECISE DIMENSIONS). FOR ALL OTHER DIMENSIONS NOT SHOWN BUT REQUIRED FOR TOOL BUILD, SEE MATH MODEL FOR PRECISE TOOL PATH DATA.

2. MATERIAL RECYCLING CODE PER ISO 11469. (2.3)X(0.1) RAISED CHARACTERS AS SHOWN TO BE LOCATED ON ANY EXTERIOR SURFACE. OPTIONAL CONSTRUCTION TO BE NO MATERIAL RECYCLING CODE.

3. THIS PART IS NOT CONTROLLED FOR AUTOMATIC ASSEMBLY.

4. REFERENCE MATING COMPONENTS OR EQUIVALENT

   CONNECTOR & SEAL ASM 12033769

5. (2.3)X(0.1) DELPHI CORPORATE BRAND TO BE LOCATED ON ANY ESTIMIUM SUBFACE, PREFERABLY VISIBLE AT FINAL ASSEMBLY. OPTIONAL CONSTRUCTION FOR EXISTING TOOLING MAY BE "PRD".

VIEW SCALE DOES NOT REFLECT ACTUAL PART SIZE

PART NO	REV	N/P	STATUS	MATERIAL SPECIFICATION AND COLOR	VOLUME CM³
12146104	A4	-		M3592004 PA66 HS IM RED	6.516
12089271	D4	-		M3592006 PA66 HS IM YEL	6.516
12033731	D5	-		M3592001 PA66 HS IM BLK	6.516

NUMERICAL BASIC (MM)										
FROM	0.2	0.5	1.0	2.0	>10	>100	>250	>500	>1000	>2000
TO	0.5	1.0	2.0	10	100	250	500	1000	2000	4000
TOLERANCE (MM)										
±0.15	±0.2	±0.3	±0.5	±0.8	±1.2	±2	±3	±5	±8	±12

ANGULAR TOLERANCE ±0°

PROCESS SENSITIVE DIMENSION	
CONNECTOR CRIMPING TO 4 LB PULL OR 1 LB PUSH ON CONTACT WITH 0.5 MM PLUNGER	
MATL MIN ELONGATION	

FINAL PART	PART DRAWING
TITLE	
VOLUME CM³	SEE CHART
FIRST USE	

UNLESS OTHERWISE SPECIFIED
THIS DOCUMENT IS IN ACCORDANCE WITH ASME Y14.5M-1994 UNLESS OTHERWISE SPECIFIED. DELPHI PROPRIETARY INFORMATION: REPRODUCTION, DISTRIBUTION OR DISCLOSURE TO OTHERS WITHOUT WRITTEN PERMISSION OF DELPHI IS PROHIBITED. DELPHI RETAINS OWNERSHIP OF ALL RIGHTS, INCLUDING PATENT RIGHTS, IN THIS DOCUMENT.

ALL DIMENSIONS ARE IN MILLIMETERS

REFERENCE

THIRD ANGLE PROJECTION

DO NOT SCALE

USE MATH DATA

DELPHI

DELPHI PACKARD ELECTRIC SYSTEMS
WARREN, OH

		DATE
DR	J. HOUGELMAN	31AUG2
APVD1 I.E.	HERMOSILLO	05MRC2
APVD2 E.E.	HERMOSILLO	05MRC2
APVD3	TRACEY	06MRC2
APVD4		
APVD5		

SUBSTANCES OF CONCERN AND RECYCLED CONTENT PER DELPHI 10MPR001

MATERIAL
SEE CHART

DRAWING NAME

TAXI COV FUSE

DRAWING NUMBER

12089272

SIZE	SCALE	FRAME NO	SHEET NO	STR	REV	N/P
A0	5:1	1 OF 1	1 OF 1	R	04	-