NOTE	SPECIFICATIONS
1	FEMALE CONNECTOR ACCORDING TO APTIV SPECIFICATION: CAQE 0408/119
2	FEMALE CONNECTOR ACCORDING TO: -TEMPERATURE CLASS T3 -ENGINE VIBRATOR CLASS V3 -SEALING CLASS E2
3	MATING FORCE ON SLIDER = 60N MAXI
4	USER'S MANUAL: PU122
5	DELIVERY CONNECTOR WEIGHT : 46.5g
6	NO WAFER HINGE OR WAFER HINGE BROKEN ALLOWED
7	VISUAL DEFECTS ON NO FUNCTIONNAL AREAS ALLOWED

DWG STATUS DATE	STG	REV	N/P	CHG	ZONE	REVISION HISTORY	AUTH	DR	APVD 1	APVD 2
220C20	R	01				INITIAL RELEASE		P.BAL	J.LAL	L.LEC

SLIDE OPEN

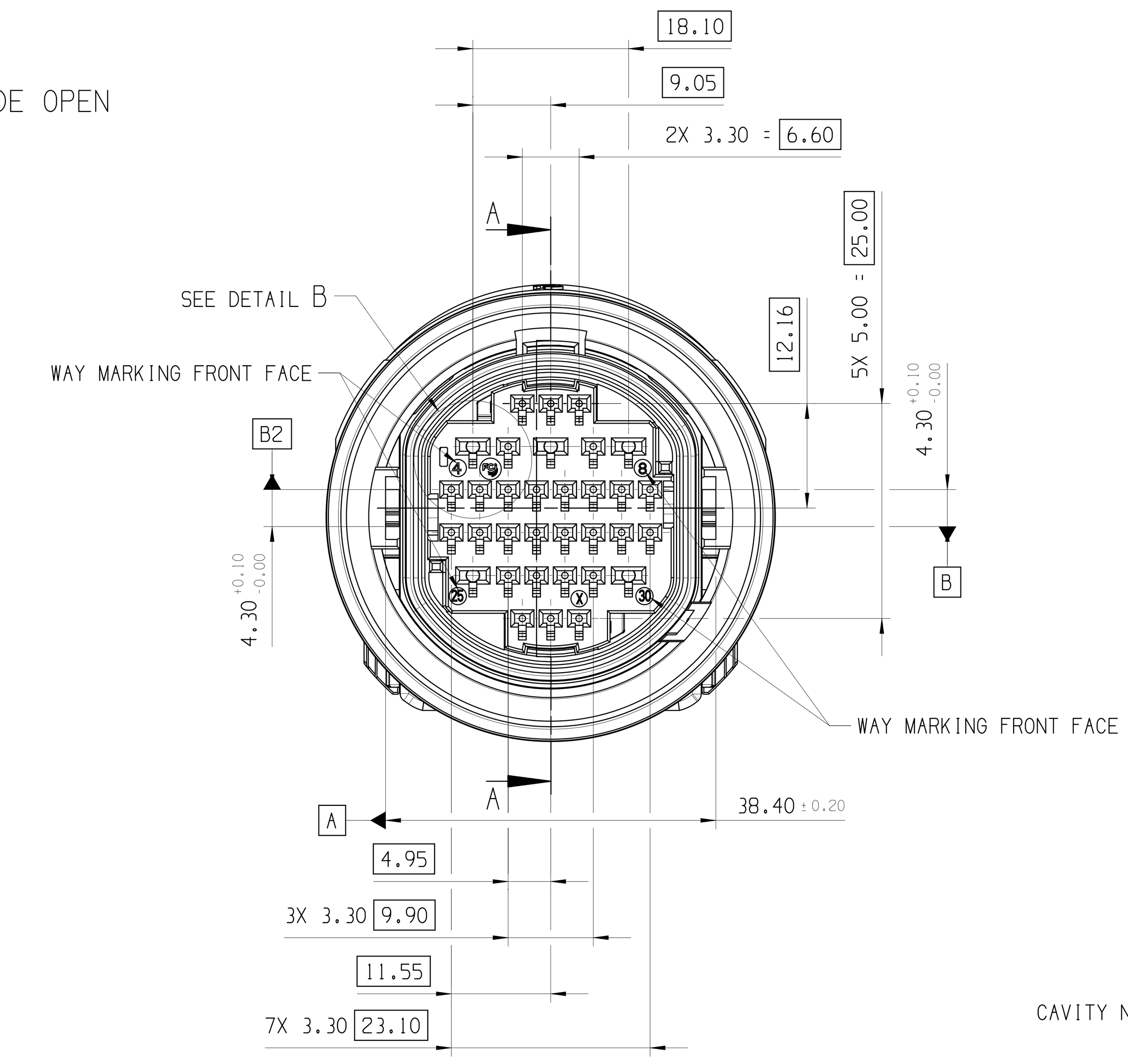

DETAIL B
SCALE 5:1

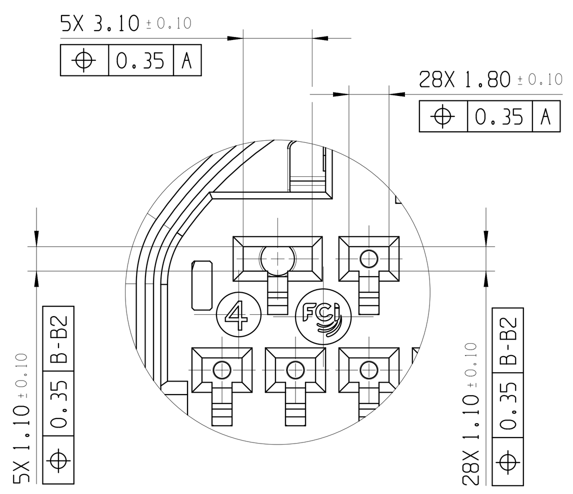

SECTION A-A

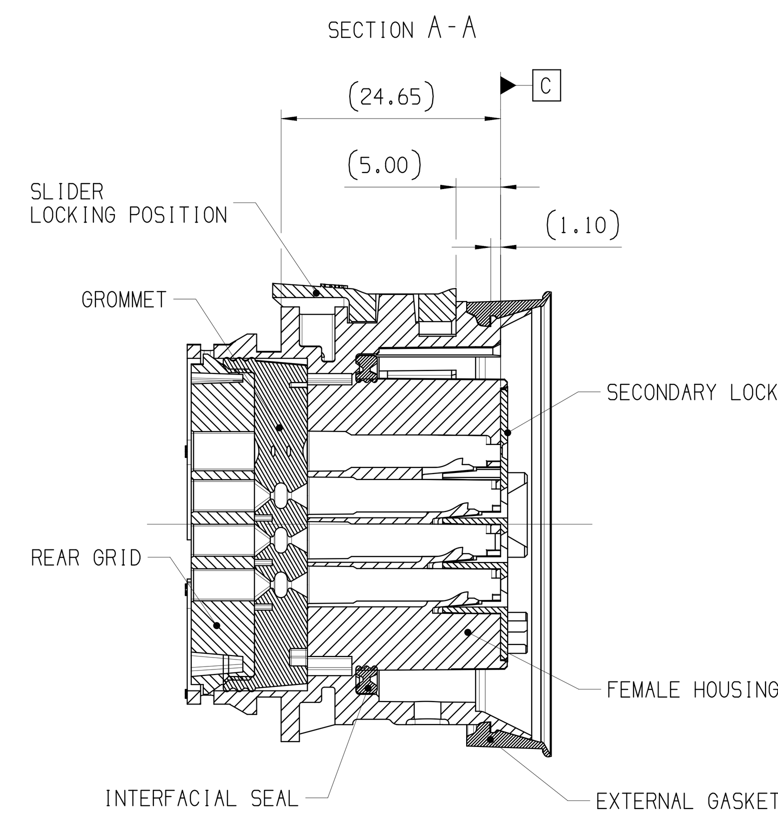

MARKING ASSEMBLY DATE

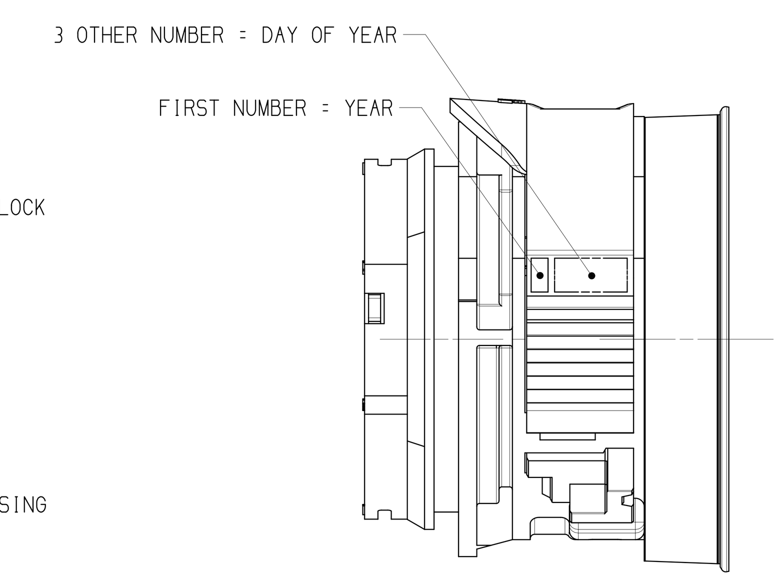

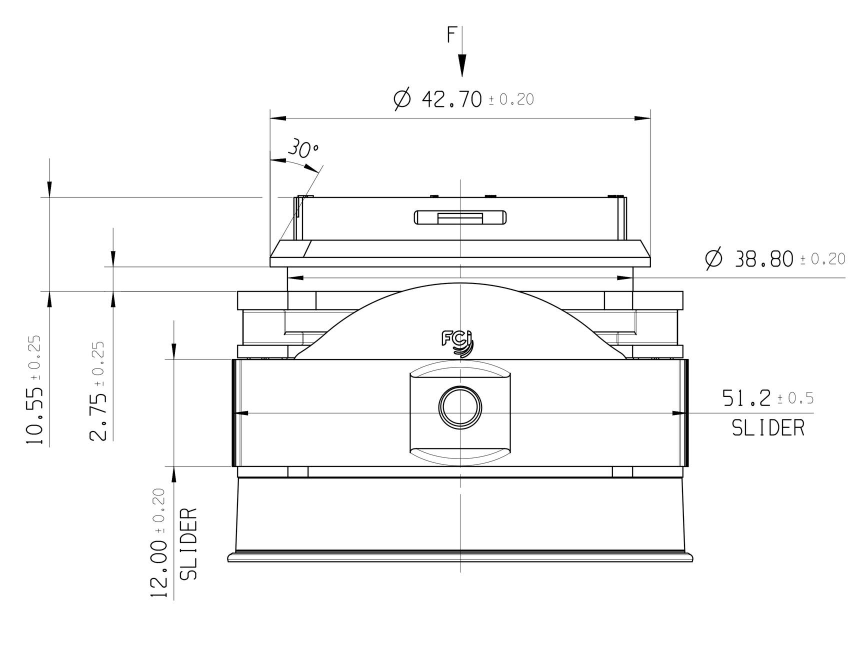

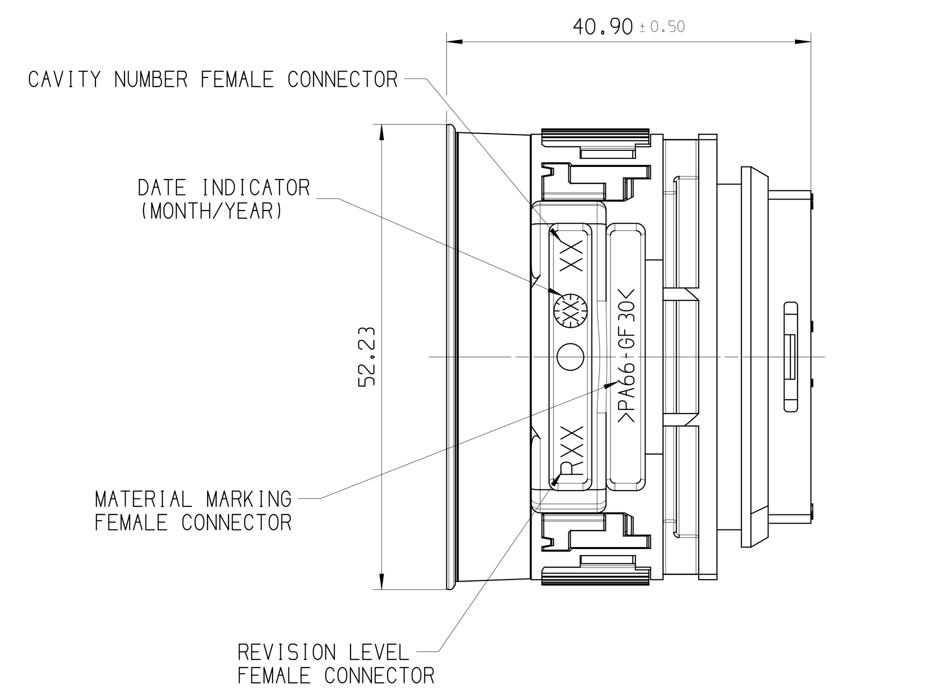

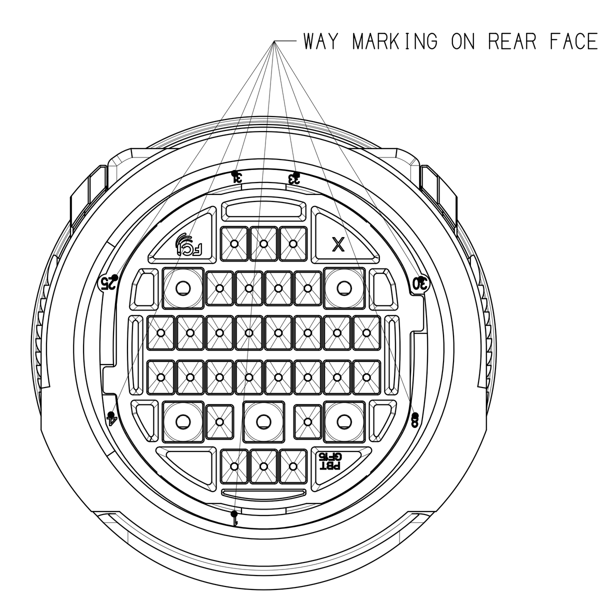

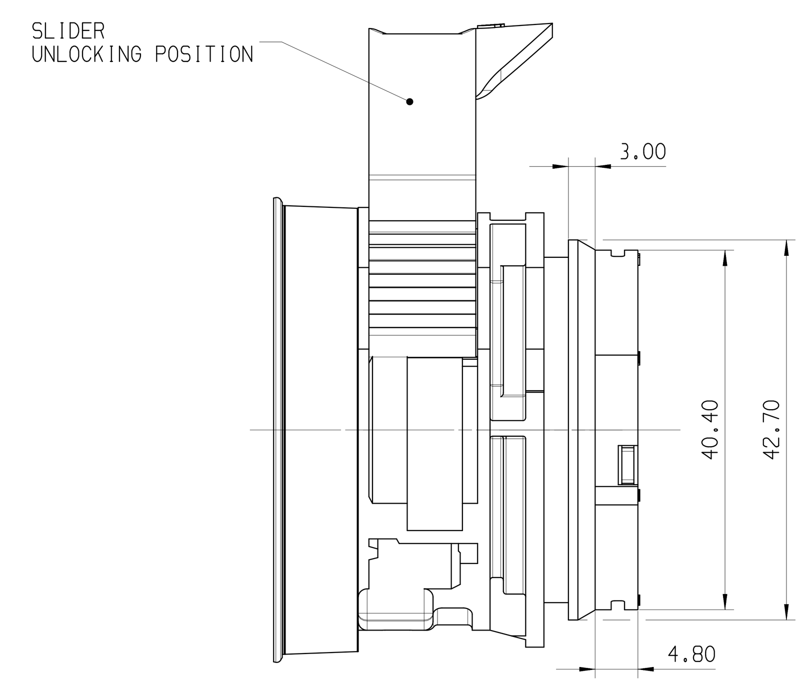

ASSOCIATED PARTS (FOR INFORMATION)			
	APTIV P/N	WIRE SECTION	DIAMETER OF WIRE SIZE
FEMALE TERMINAL 1.5	SEE DRAWING 10857567-CUS01	0.5mm² - 2 mm²	1.4mm - 2.8mm
FEMALE TERMINAL 2.8	SEE DRAWING 10858092-CUS06	2.5mm² - 4 mm²	2.65mm - 3.9mm

	DESCRIPTION	MVL PART NUMBER	APTIV PART NUMBER	MATERIAL	COLOR
FEMALE CONNECTOR 33WAY	SLIDER	C118300	33507945	PBT GF30	BROWN
	INTERFACIAL SEAL	C789300	33503356	SYLICON RUBBER HARDNESS 50 Sh. A	BLUE
	EXT-GASKET	C137400	33503337	SYLICON RUBBER HARDNESS 60 Sh. A	BLACK
	SECONDARY LOCK	C218300	33507967	PBT GF30	YELLOW
	GROMMET	C689300	33503354	SYLICON RUBBER HARDNESS 20 Sh. A	BLUE
	REAR GRID	C018300	33514860	PBT GF15	BROWN
	FEMALE HOUSING	S438300	33527065	PA6.6 GF30	GREY
		S418300	33508424	PA6.6 GF30	BLACK

FEMALE CONNECTOR 33WAY

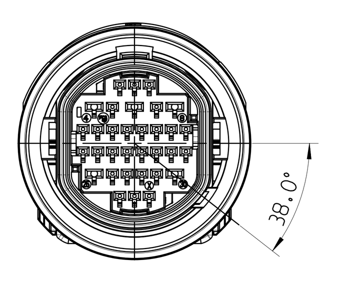 38.0°	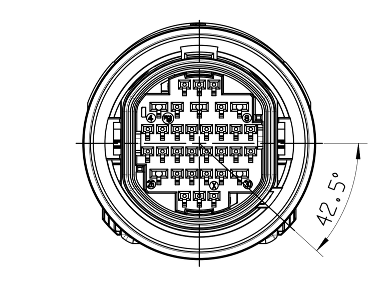 42.5°	VIEW F SCALE 1:1
GREY	BLACK	COLOR
F299300	F618300	MVL PART NUMBER
33503445	33503444	APTIV PART NUMBER
01	01	APTIV PART REVISION

OVERALL DIMENSION FOR MOUNTABILITY

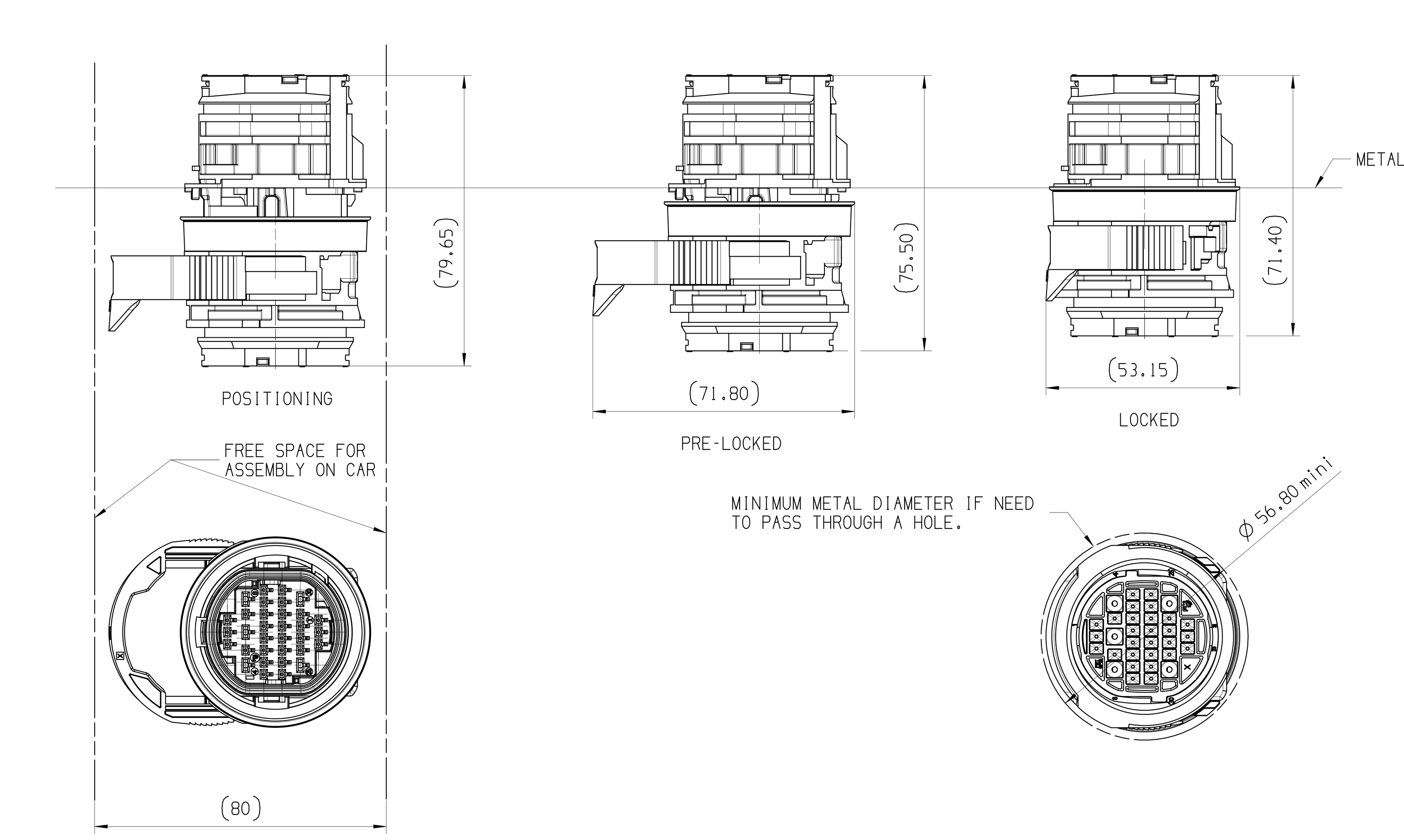

SCALE 1:1

3D VIEW

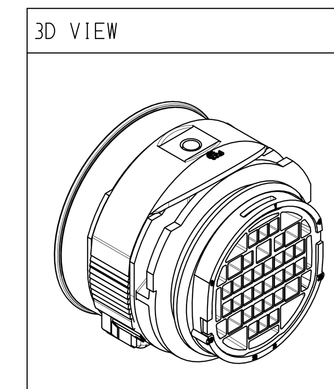

SCALE 1:1

A ——— LINE DRAWN THROUGH A PART NUMBER INDICATES THAT PHYSICAL PARTS ARE NOT AVAILABLE FOR ORDERING.

PART NUMBERS THAT DO NOT HAVE A LINE PRESENT INDICATE THAT PHYSICAL PARTS ARE AVAILABLE FOR ORDERING.

CONTACT APTIV SALES TO ASSURE AVAILABILITY OF PARTS.

R 0.1 MAX
R 0.2 MAX
SHARP CORNER TOLERANCE

⬭ DIM TO CHECK	DIMENSIONAL RANGE (MM)								CHART E1
( ) DIM FOR HELP	FROM > 0 TO 20	> 20 30	> 30 70	> 70 100	>100 150	>150 200	>200 250	>250 300	>300 400
▭ THEORETIC DIM	TOLERANCE UNLESS OTHERWISE SPECIFIED								
	±0.15	±0.2	±0.3	±0.4	±0.5	±0.6	±0.8	±1	±1.2
	ANGULAR TOLERANCE ±2°								

DWG TYP: PART DRAWING
WEIGHT (GR): SEE NOTE
VOLUME (CM³): ---
ROUTING
DISTR CODE: D

UNLESS OTHERWISE SPECIFIED

GENERAL TOLERANCES ACCORDING TO: SEE CHART

GD&T ACCORDING TO: ISO 1101

REFERENCE

FIRST ANGLE PROJECTION

DO NOT SCALE
USE MATH DATA
CAD NX

•APTIV•
CONNECTION SYSTEMS
Chennai, India

COPYRIGHT 2020 APTIV. ALL RIGHTS RESERVED.

THIS DRAWING IS THE PROPERTY OF APTIV AND CONTAINS APTIV CONFIDENTIAL INFORMATION. THE REPRODUCTION, DISTRIBUTION AND UTILIZATION OF THIS DOCUMENT OR ITS RELATED CAD MATH DATA, AS WELL AS COMMUNICATION OF ANY CONTENT TO OTHERS, WITHOUT EXPRESS AUTHORIZATION, IS PROHIBITED.

CE PLAN EST LE PROPRIETE DE APTIV ET CONTIENT DES INFORMATIONS APTIV CONFIDENTIELLES LA REPRODUCTION, LA DISTRIBUTION ET L'UTILISATION DE CE DOCUMENT OU DE SES DONNÉES MATHÉMATIQUES CAO, AINSI QUE LA COMMUNICATION DE TOUT CONTENU À AUTRUI, SANS AUTORISATION EXPRESSE EST INTERDITE

		DATE
DR	P.BALAJI	220C20
APVD1	J.LALU	220C20
APVD2	L.LECLERE	220C20
APVD3		
APVD4		
APVD5		

SUBSTANCES OF CONCERN AND RECYCLED CONTENT PER APTIV 10949001
MATIERES PROSCRITES ET CONTENU RECYCLABLE SELON APTIV 10949001

MATERIAL: SEE TABLE

DRAWING NAME: 33WAY FEMALE CONNECTOR

DRAWING NUMBER: 33526229

SIZE	SCALE	FRAME NO	SHEET NO	STG	REV	N/P
A0	2:1	1 OF 1	1 OF 1	R	01	

User: KZ5GTM
Part: 33526229-CUS01-S01/01 Date: 27-Oct-20 Time: 21:24:51
KZ5GTM,10272020,16:54,200pass,cus