DESIGNATED CHARACTERISTICS				QCI	KPC
1		LAST NO USED	K OR Q IN SYMBOL INDICATES CHECKPOINT	FIT/FUNCTION	CI	FF
1	0	TOTAL ON DRAWING		SAFETY/COMPLIANCE	SC

KPC NO	QCI NO	TYPE	DESCRIPTION	RATIONALE	ZONE	SH	PTS
1	-	S/C	DIM #8 - SEAL CROSS SECTION	CRITICAL FOR SEALING	G11	1	2

SYMBOL DEFINITION

A DIMENSION WITHOUT AN INSPECTION REPORT SYMBOL DOES NOT REQUIRE INSPECTION. IT MAY BE CONTROLLED ON THE INDIVIDUAL COMPONENT DRAWING.

TOTAL NO OF INSPECTIONS REQUIRED	31
LAST NO. USED	8

MISSING SYMBOLS

NO MISSING SYMBOL NUMBER

DWG STATUS DATE	STG	REV	N/P	CHG	ZONE	REVISION HISTORY	AUTH	DR	APVD 1	APVD 2
28MY21	R	01	-	-		RELEASED PD	554427	TAI	TAI	MF
11FE22	R	01	AA	-		REVISED DIM TOL FOR DIMS #2,#3,#5 & #6	556571	JS	JS	MF
15JL22	R	01	AB	-		UPDATED PART AVAILABILITY (P/N WAS NOT AVAILABLE)	558059	JAA	JAA	RM
09DE25	R	02	-	-		DIM #8 WAS TOOL SYMBOL, ADDED "KPC" CHART & SYMBOL AND "CONTROL PLAN" NOTE	566051	GLG	CGD	AR

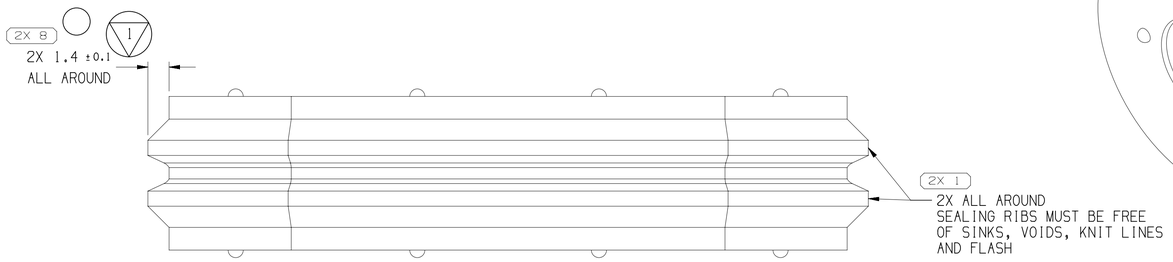

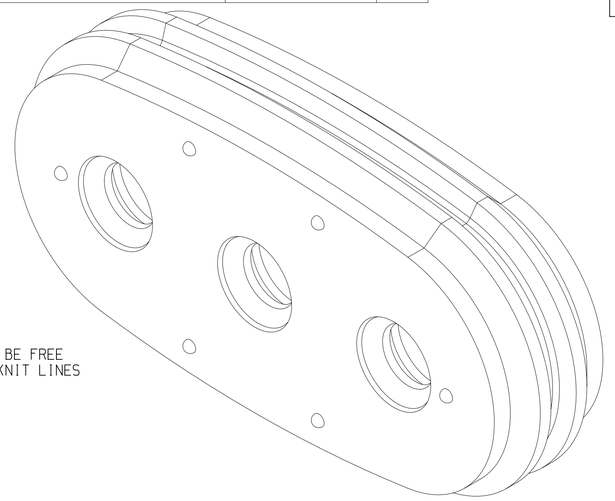

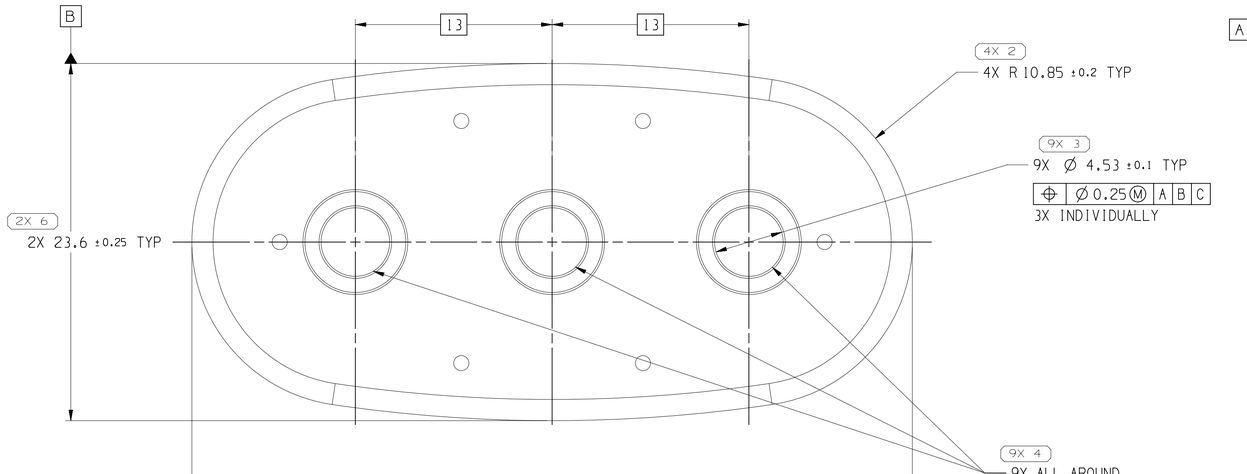

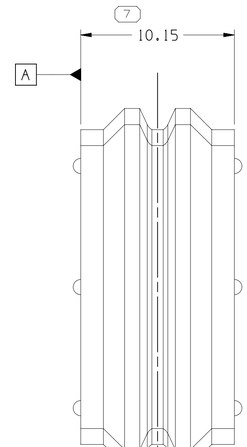

NOTES

1. UNLESS OTHERWISE SPECIFIED AND/OR INDICATED:

   DIMENSIONS ARE TO FACE OF VIEW SHOWN AND AUTOMATICALLY ROUNDED BY COMPUTER FOR INSPECTION (SEE MATH MODEL FOR PRECISE DIMENSIONS). FOR ALL OTHER DIMENSIONS NOT SHOWN BUT REQUIRED FOR TOOL BUILD, SEE MATH MODEL FOR PRECISE TOOL PATH DATA.

2. THIS PART USED IN ASSEMBLY 35556311.
3. THIS PRODUCT IS NOT CATEGORIZED AS AN APPEARANCE ITEM, MINOR IMPERFECTIONS INCLUDING, BUT NOT LIMITED TO, FLOW MARKS, COLOR BLEMISHES, GATE VESTIGE, AND SOFT FLASH THAT DO NOT AFFECT THE FIT, FORM, OR FUNCTION OF THE PART ARE PERMISSIBLE PER EANP_4-3_CS_01_EN.
4. PARTS ARE TO BE PACKAGED IN SEALED PLASTIC BAGS. GROSS WEIGHT INCLUDING CARTON IS NOT TO EXCEED 15 POUNDS.
5. SEE CONTROL PLAN FOR QUALITY REQUIREMENTS FOR ANY KEY PRODUCT CHARACTERISTICS

7 PROCESS SENSITIVE DIMENSION

DIMENSIONS ENCLOSED IN ( ) INDICATE REFERENCE DIMENSIONS AND NO TOLERANCE LIMITS ARE ESTABLISHED

DIMENSIONAL RANGE (MM)				CHART C
FROM	>0	>25	>60	>80
TO	25	60	80	
TOLERANCE UNLESS OTHERWISE SPECIFIED				
	±0.3	±0.5	±0.6	±0.75%
ANGULAR TOLERANCE ±2°				

A LINE DRAWN THROUGH A PART NUMBER INDICATES THAT PHYSICAL PARTS ARE NOT AVAILABLE FOR ORDERING.

PART NUMBERS THAT DO NOT HAVE A LINE PRESENT INDICATE THAT PHYSICAL PARTS ARE AVAILABLE FOR ORDERING.

CONTACT APTIV SALES TO ASSURE AVAILABILITY OF PARTS.

DWG TYPE: PART DRAWING

STYLE

VOLUME (CM³): 8.025

DISTR CODE: D

UNLESS OTHERWISE SPECIFIED

THIS DOCUMENT IS IN ACCORDANCE WITH ASME Y14.5M-1994 AS AMENDED BY THE GM GLOBAL DIMENSIONING AND TOLERANCING ADDENDUM-2001. SEPARATE PATTERNS OF FEATURES MAY BE GAGED SEPARATELY REGARDLESS OF DATUM REFERENCES.

ALL DIMENSIONS ARE IN MILLIMETERS

REFERENCE

THIRD ANGLE PROJECTION

DO NOT SCALE

USE MATH DATA

CAD NX

•APTIV•

CONNECTION SYSTEMS

WARREN, OH

COPYRIGHT 2021 APTIV. ALL RIGHTS RESERVED.

THIS DRAWING IS THE PROPERTY OF APTIV AND CONTAINS APTIV CONFIDENTIAL INFORMATION. THE REPRODUCTION, DISTRIBUTION AND UTILIZATION OF THIS DOCUMENT OR ITS RELATED CAD MATH DATA, AS WELL AS COMMUNICATION OF ANY CONTENT TO OTHERS, WITHOUT EXPRESS AUTHORIZATION, IS PROHIBITED.

		DATE
DR		
APVD1	T. ILER	28MY21
APVD2	T. ILER	28MY21
APVD3	M. FREDRICKSON	28MY21
APVD4		
APVD5		

SUBSTANCES OF CONCERN AND RECYCLED CONTENT PER APTIV 1094900I

MATERIAL: SILICONE COMPOUND GRAY

DRAWING NAME: SEAL CONN

DRAWING NUMBER: 35556303

SIZE	SCALE	FRAME NO	SHEET NO	STG	REV	N/P
A1	5:1	1 OF 1	1 OF 1	R	02	-

User: julcz Date: 10-Dec-25 Time: 07:12:37
Dwg: 35556303-CUS01-S01/02
Tmpl: 12102025_3:11_110bpass.nor