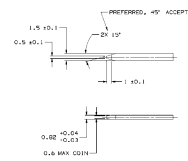

RECOMMENDED MATERIAL: P-1546 (CA 2101 - EXTRA SPRING TEMPER - TIN PLATED BRASS
PLATING THICKNESS: 0.003 - 0.005 MM
TENSILE STRENGTH: 430 MPA
USE OF A MATERIAL WITH A CONDUCTIVITY < 20% IACS AT 68°F
SHOULD BE APPROVED BY PACKARD ELECTRIC.

MATING TERMINAL INFORMATION

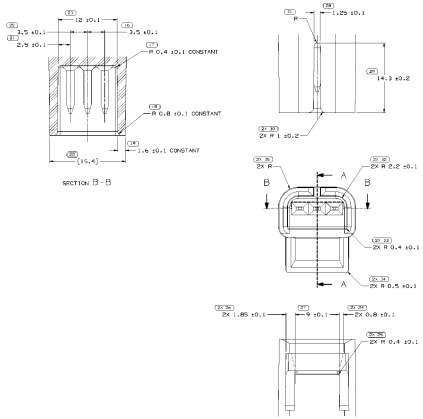

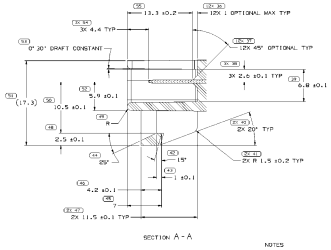

MATING CONNECTOR INFORMATION
INSPECTION SYMBOLS SHOWN IN THESE VIEWS ARE FOR REFERENCE ONLY

NOTES
1. UNLESS OTHERWISE SPECIFIED AND/OR INDICATED:

   DIMENSIONS ARE TO FACE OF VIEW SHOWN AND AUTOMATICALLY ROUNDED BY COMPUTER FOR INSPECTION (SEE MATH MODEL FOR PRECISE DIMENSIONS). FOR ALL OTHER DIMENSIONS NOT SHOWN BUT REQUIRED FOR TOOL BUILD, SEE MATH MODEL FOR PRECISE TOOL PATH DATA.
   ALL RADII = 1.5
   DRAFT IS 0°30' MAX ON ALL OUTSIDE SURFACES
2. TERMINAL MUST WITHSTAND A MINIMUM PUSHOUT FORCE OF 89 N (20 LBS)
3. RECOMMENDED MATERIAL: GLASS REINFORCED NYLON OR POLYESTER.

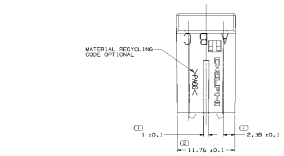

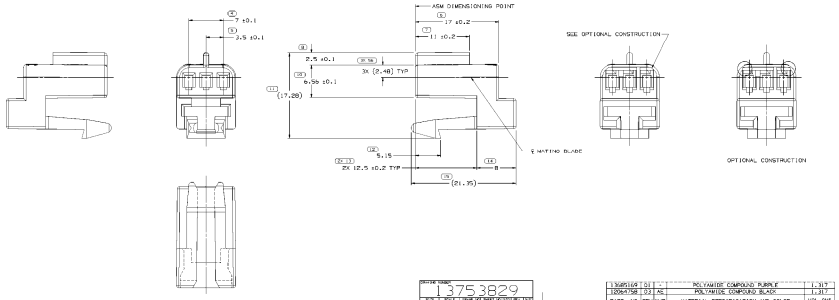

NOTES
1. UNLESS OTHERWISE SPECIFIED AND/OR INDICATED:

   DIMENSIONS ARE TO FACE OF VIEW SHOWN AND AUTOMATICALLY ROUNDED BY COMPUTER FOR INSPECTION (SEE MATH MODEL FOR PRECISE DIMENSIONS). FOR ALL OTHER DIMENSIONS NOT SHOWN BUT REQUIRED FOR TOOL BUILD, SEE MATH MODEL FOR PRECISE TOOL PATH DATA.
2. MATERIAL RECYCLING CODE PER ISO 11469, (11310) CHARACTERS AS SHOWN TO BE LOCATED ON ANY EXTERIOR SURFACE. OPTIONAL CONSTRUCTION TO BE NO MATERIAL RECYCLING CODE.
3. THIS PRODUCT IS NOT CATEGORIZED AS AN APPEARANCE ITEM, MINOR IMPERFECTIONS INCLUDING, BUT NOT LIMITED TO, FLOW MARKS, COLOR BLEMISHES, GATE VESTIGE, AND SOFT FLASH THAT DO NOT AFFECT THE FIT, FORM, OR FUNCTION OF THE PART ARE PERMISSIBLE PER NMP 4.10-18.
4. (11X10.1) DELPHI CORPORATE BRAND TO BE LOCATED ON ANY EXTERIOR SURFACE VISIBLE AFTER INSTALLATION IN ASSEMBLY. OPTIONAL CONSTRUCTION FOR EXISTING TOOL NO MAY BE "PSD" OR NO LOGO.
5. THIS CONNECTOR WILL PASS THROUGH A Ø 7.9 MIN HOLE.
6. FOR APPLICATION DATA SEE THE INDIVIDUAL APPLICATION DRAWINGS.

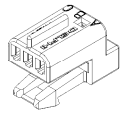

SYMBOL DEFINITION		
A DIMENSION WITHIN/ON INSPECTION REPORT SYMBOL (*) DOES NOT REQUIRE INSPECTION. IT MAY BE CONTROLLED ON THE INDIVIDUAL COMPONENT DRAWING.	TOTAL NO OF INSPECTIONS REQUIRED	95
	LAST NO. USED	96

MISSING SYMBOLS
0

REVISION HISTORY									
ECR STATUS									
DATE	ORDER/WO	NUMBER							
06JAN09	R	01							