SYMBOL DEFINITION		
A DIMENSION WITHOUT AN INSPECTION REPORT SYMBOL (□) DOES NOT REQUIRE INSPECTION. IT MAY BE CONTROLLED ON THE INDIVIDUAL COMPONENT DRAWING.	TOTAL NO OF INSPECTIONS REQUIRED	9
	LAST NO. USED	8

MISSING SYMBOLS
NO MISSING SYMBOL NUMBER

DWG STATUS DATE	STA	REC	N/P	DIB	ZONE	REVISION HISTORY	AUTH	DR	APVD 1	APVD 2
02AU05	R	31	-	-		13536533-41 WERE PE142285-93 & RELEASED	270573	JS	JS	RC
16AU05	R	32	-	-		ALL PARTS - CLIP P/N WAS 15411124, REVISED NOTE #4	271188	END	END	RC
04NOV05	R	33	-	-		ALL PARTS - REVISED OHMS RESISTANCE VALUES ON CONNECTORS AND REVISED CHART	273978	MM	MM	RC
06JN06	R	34	-	-		ALL PARTS - REVISED CUSTOMER PART NUMBER AND SPEC IN NOTE 4	281171	MM	MM	RC
28JN08	R	35	-	-		ALL PARTS - PROCESS SENSITIVE DIMENSION W/G N/A	440235	ABC	ABC	MM

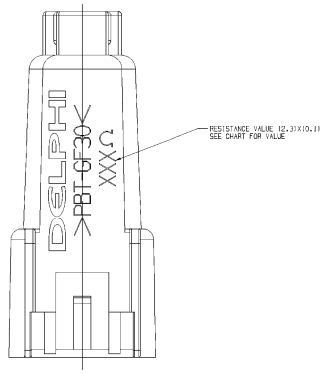

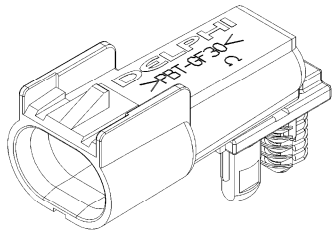

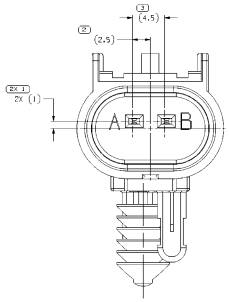

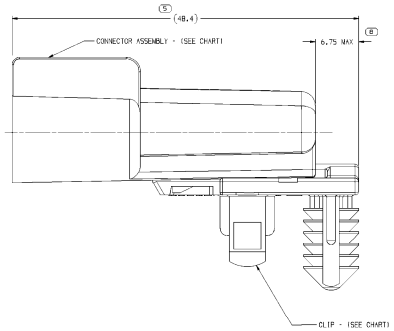

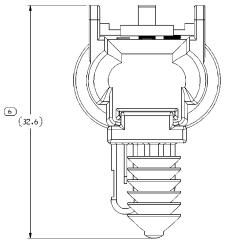

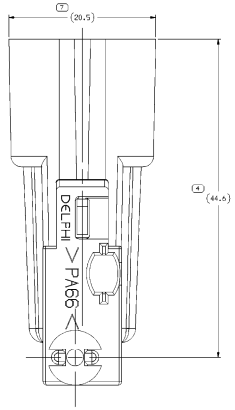

NOTES

1. UNLESS OTHERWISE SPECIFIED AND/OR INDICATED:

   DIMENSIONS ARE TO FACE OF VIEW SHOWN AND AUTOMATICALLY ROUNDED BY COMPUTER FOR INSPECTION (SEE MATH MODEL FOR PRECISE DIMENSIONS). FOR ALL OTHER DIMENSIONS NOT SHOWN BUT REQUIRED FOR TOOL BUILD, SEE MATH MODEL FOR PRECISE TOOL PATH DATA.

2. ASSEMBLY: BE SURE TO SEAT CLIP SECURELY IN THE CONNECTOR BODY CLIP SLOT.

3. REFERENCE MATING COMPONENTS OR EQUIVALENT:

   CONNECTOR 15326801

4. PARTS MUST MEET BORGWARNER SPEC 44-00-430-039-C AND 44-00-447-008.

5. THIS PART ACCEPTS THE FOLLOWING COMPONENTS OR EQUIVALENT:

   TERMINAL 15326426
   (FEMALE TERMINAL MUST HAVE GOLD PLATED TERMINAL CONTACT AREA)

BORGWARNER PART NO	PART NO	REV	N/P	STATUS	CONN ASM	RESISTANCE (OHMS ±1%)	CLIP
44-00-694-009	13536541	03	AB	-	13534895	12700	15326712
44-00-694-008	13536540	03	AB	-	13534894	7320	15326712
44-00-694-007	13536539	03	AB	-	13534893	3160	15326712
44-00-694-006	13536538	03	AB	-	13534892	1820	15326712
44-00-694-005	13536537	03	AB	-	13534891	1150	15326712
44-00-694-004	13536536	03	AB	-	13534890	715	15326712
44-00-694-003	13536535	03	AB	-	13534889	453	15326712
44-00-694-002	13536534	03	AB	-	13534888	255	15326712
44-00-694-001	13536533	03	AB	-	13534887	115	15326712

PROPRIETARY INFORMATION
THE DRAWING TEMPLATE / FORM NUMBER INDICATES THAT PHYSICAL PARTS ARE NOT AVAILABLE FOR ORDERING.
PART NUMBERS THAT DO NOT HAVE A LINE PRESENT INDICATE THAT PHYSICAL PARTS ARE AVAILABLE FOR ORDERING.
CONTACT ENGINE SALES TO ASSURE AVAILABILITY OF PARTS.

DWG TYPE: PART DRAWING
STYLE:
VOLUME (CM³):
SURFACE (DM²):

UNLESS OTHERWISE SPECIFIED
THIS DOCUMENT IS IN ACCORDANCE WITH ASME Y14.5M-1994 UNLESS OTHERWISE SPECIFIED. DIMENSIONS ARE TO BE CALCULATED MINIMUM DATA. DIMENSIONS FOLLOWING AN * FEATURE ARE BY BORG WARNER. PROBLEMS OF DATUM REFERENCE.

ALL DIMENSIONS ARE IN MILLIMETERS

PROCESS INSPECTION STANDARDS: REFERENCE
DIMENSIONS ENCLOSED IN ( ) INDICATE REFERENCE DIMENSIONS. ALL OTHER DIMENSIONS HAVE ±0.25 TOLERANCE

| STANDARD DIMENSIONAL TOLERANCE | | |