SYMBOL DEFINITION		
A DIMENSION WITHOUT AN INSPECTION REPORT SYMBOL ( ) DOES NOT REQUIRE INSPECTION. IT MAY BE CONTROLLED ON THE INDIVIDUAL COMPONENT DRAWING.	TOTAL NO OF INSPECTIONS REQUIRED	4
	LAST NO. USED	4

MISSING SYMBOLS
NO MISSING SYMBOL NUMBER

DWG STATUS					ZONE	REVISION HISTORY	AUTH	DR	APVD 1	APVD 2
DATE	STG	REV	N/P	CHG						
29DE16	R	01	-	-		INITIAL DRAWING RELEASED	432801	AYZ	WGJ	AYZ
02JN17	R	01	AA	-	-	33340542 DIM A WAS 10.7; ADDED NOTES 3&4	438713	AYZ	TY	WGJ

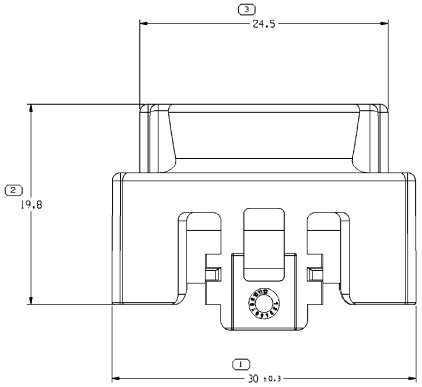

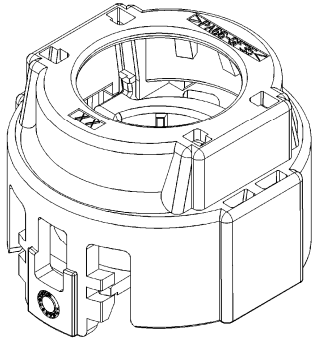

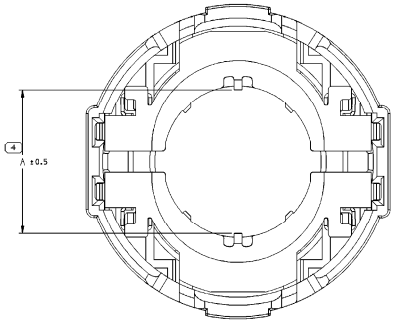

NOTES

1. UNLESS OTHERWISE SPECIFIED AND/OR INDICATED:

   DIMENSIONS ARE TO FACE OF VIEW SHOWN AND AUTOMATICALLY ROUNDED BY COMPUTER FOR INSPECTION (SEE MATH MODEL FOR PRECISE DIMENSIONS). FOR ALL OTHER DIMENSIONS NOT SHOWN BUT REQUIRED FOR TOOL BUILD, SEE MATH MODEL FOR PRECISE TOOL PATH DATA.

2. PACKING FLATWISE IN TRAY CORRUGATED IN CARTON.

3. THE ACCEPT CABLE SHOULD BE FOLLOW SPEC. LV216

4. PARTS SHOWN ON THIS DRAWING USED IN LAYOUTS SHOWN ON TAXI DRAWING 33376479.

NO.	PART NO.	TITLE	DIMENSION "A"	1X COVER	2X SHELL	FIT FOR CABLE OD
8	33340542	ASM LOCK RETAINER FOR 16mm² CABLE	10.0	33340543	33340548	$10.2_{-0.6}$
7	35069226	ASM LOCK RETAINER FOR 25mm² CABLE	12.0	35037729	33340547	$12.2_{-0.6}$
6	35036858	ASM LOCK RETAINER FOR 25mm² CABLE	12.0	35036856	33340547	$12.2_{-0.6}$
5	35036857	ASM LOCK RETAINER FOR 25mm² CABLE	12.0	35036855	33340547	$12.2_{-0.6}$
4	33340541	ASM LOCK RETAINER FOR 25mm² CABLE	12.0	33340543	33340547	$12.2_{-0.6}$
3	35037731	ASM LOCK RETAINER FOR 35mm² CABLE	14.2	35037729	33340546	$14.4_{-0.6}$
2	33340540	ASM LOCK RETAINER FOR 35mm² CABLE	14.2	33340543	33340546	$14.4_{-0.6}$
1	33340539	ASM LOCK RETAINER FOR 50mm² CABLE	15.5	33340543	33340545	$15.8_{-0.6}$

A LINE DRAWN THROUGH A PART NUMBER INDICATES THAT PHYSICAL PARTS ARE NOT AVAILABLE FOR ORDERING.

PART NUMBERS THAT DO NOT HAVE A LINE PRESENT INDICATE THAT PHYSICAL PARTS ARE AVAILABLE FOR ORDERING.

CONTACT DELPHI SALES TO ASSURE AVAILABILITY OF PARTS.

DWG TYPE: CUSTOMER PART DRAWING

STYLE

VOLUME (QPY): SEE CHART

DISTR CODE

UNLESS OTHERWISE SPECIFIED

THIS DOCUMENT IS IN ACCORDANCE WITH ASME Y14.5M-1994 AS AMENDED BY ASME Y14.5M-1994 SUBSTANDARD TOLERANCING ADDENDUM-2001. SEPARATE PATTERNS OF FEATURES MAY BE MADE SEPARATELY REGARDLESS OF DATUM REFERENCES.

ALL DIMENSIONS ARE IN MILLIMETERS

(N/A) PROCESS SENSITIVE DIMENSION

DIMENSIONS ENCLOSED IN ( ) INDICATE REFERENCE DIMENSIONS AND NO TOLERANCE LIMITS ARE ESTABLISHED

REFERENCE

DIMENSIONAL RANGE (MM)												CHART
FROM	> 0	> 6	> 30	> 70	>120	>160	>200	>250	>315			
TO	6	30	70	120	160	200	250	315	400			
TOLERANCE UNLESS OTHERWISE SPECIFIED												
±0.1	±0.2	±0.3	±0.4	±0.45	±0.55	±0.7	±0.85	±1.05				
ANGULAR TOLERANCE ±1°												

THIRD ANGLE PROJECTION

DO NOT SCALE

USE MATH DATA

CAD NX

DELPHI

DELPHI PACKARD ELECTRICAL/ELECTRONIC ARCHITECTURE
WARREN, OH

COPYRIGHT 2015 DELPHI CORPORATION AND/OR ITS AFFILIATES.
ALL RIGHTS RESERVED.

THIS DRAWING IS THE PROPERTY OF DELPHI CORPORATION AND CONTAINS DELPHI CONFIDENTIAL INFORMATION. THE REPRODUCTION, DISTRIBUTION AND UTILIZATION OF THIS DOCUMENT OR ITS RELATED CAD MATH DATA, AS WELL AS COMMUNICATION OF ANY CONTENT TO OTHERS, WITHOUT EXPRESS AUTHORIZATION, IS PROHIBITED.

		DATE
DR		
APVD1	ANYANG ZHANG	29DE15
APVD2	WEIGUO JIANG	29DE15
APVD3	ANYANG ZHANG	29DE15
APVD4		
APVD5		

SUBSTANCES OF CONCERN AND RECYCLED CONTENT PER DELPHI [0949001]

MATERIAL: SEE CHART

DRAWING NAME: TAXI LOCK COV

DRAWING NUMBER: 33340538

SIZE	SCALE	FRAME NO	SHEET NO	STG	REV	N/P
A1		1 OF 1	1 OF 1	R	01	AA

User: 12204m
Filename: 33340538-A0001-A001
Date: 02-Jun-15 Time: 09:11
Workscale