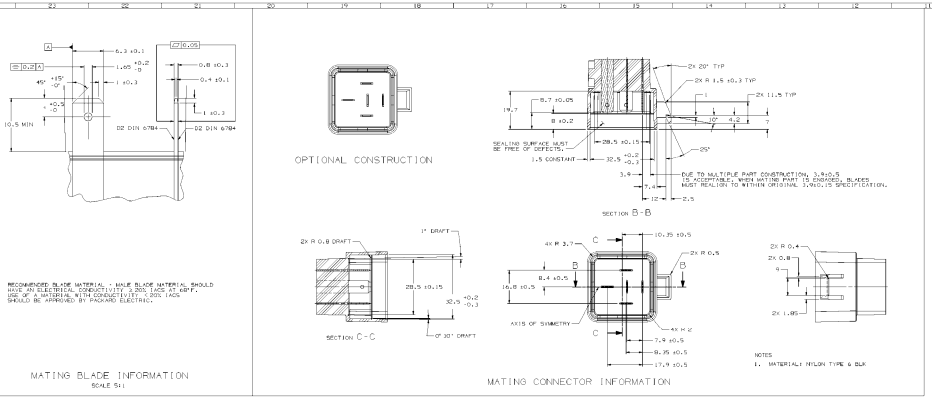
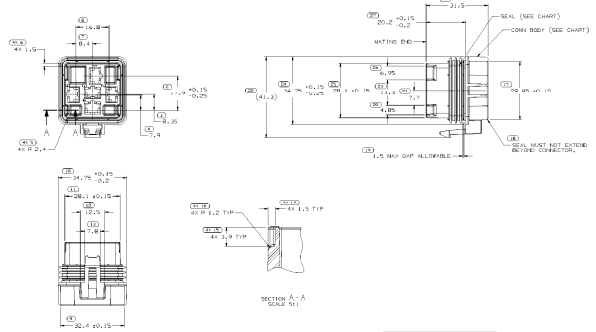




SYMBOL DEFINITION		MISSING SYMBOLS
A DIMENSION WITHOUT AN INSPECTION REPORT SYMBOL (--) DOES NOT REQUIRE INSPECTION. IT MAY BE CONTROLLED ON THE INDIVIDUAL COMPONENT DRAWING.	TOTAL NO OF INSPECTIONS REQUIRED: 42	1
	LAST NO. USED: 28	

ENG STATUS					REVISION HISTORY	NUM	BY	APVD/DATE
RELEASE	P	02			RELEASED PER ECO#06-0102(CUSTOMER DR-REVISED DIMENSIONS AND REVISED CONN SEAL	220557	RH	09/ JP
RELEASE	P	01			CONVERTED IN -VIDEO NOTE 5, REMOVED LABEL AND METHOD CODE	220505	GWEBER	JP
RELEASE	P	00			1789973 - RELEASED	218121	MAS	MAS JP/
MANUAL	P	95	-	-	1789973 - REVISED GRAPHICS	2869M	JTA	MAS JP/
RELEASE	P	94			1789972 - CONN SEAL WAS 12065662	92307	MDH	AM JP/
RELEASE	P	93			1789974 - RELEASED	92279	MDH	MDH/
RELEASE	P	90			1789966 & 1789968 - RELEASE #5 PARTS	41683	JJP	MAS JP/
RELEASE	P	89	-	-	ALL PARTS - UPDATED PDM ATTRIBUTES	41739	JBA	AM JP/
RELEASE	P	88	-	-	ALL ACTIVE PARTS - ADDED SUBMALL ATTRIBUTE	40497	JJP	AM/MDH
OBSOLETE	P	11			12065634 - OBSOLETE	40841	MDH	AM/TL

PART NO	ME/N/P	TYPE	CONN BODY	CONN SEAL	CABLE SEAL	SPECIAL NOTES
12065662	01	A4	105	13071608	13025495	20660208 (4 #AT-TAN)	
12065664	01	A8	102	12065662	12065662	20660208 (4 #AT-TAN)	SEE NOTE 8
12065670	01	A8	102	12065662	54074466	16048875 (4 #AT-GRN)	SEE NOTE 8
12065672	02	AC	104	12065662	54074466	12065672 (5 #AT-BLU)	SEE NOTE 8
12065674	02	-	101	12065662	12065662	16048875 (5 #AT-TAN)	
12065644	A2	-	101	12065662	12065662	12180642 (5 #AT-PNK)	
12065645	A2	-	101	12065662	12065662	12180643 (5 #AT-GRY)	
12065651	00	-	101	12065662	12065662	12180644 (5 #AT-ORN)	
12065653	00	-	101	12065662	12065662	12065644 (5 #AT-GRY)	
12065654	00	-	101	12065662	12065662	12065645 (5 #AT-ORN)	
12077793	02	-	101	12065662	12065662	12077793 (5 #AT-WHT)	
12077795	02	-	102	12065662	12065662	20661103 (4 #AT-WHT)	
12065672	02	-	101	12065662	12065662	12065672 (5 #AT-BLU)	
12065674	03	-	102	12065662	12065662	12065674 (5 #AT-TAN)	
12065622	00	-	103	12065662	12065662	20660208 (4 #AT-TAN)	
12065623	00	-	103	12065662	54074466	16048875 (4 #AT-GRN)	
12065624	1	-	103	12065662	54074466	12065672 (5 #AT-BLU)	
12065625	00	-	102	12065662	54074466	12065670 (4 #AT-BLU)	
12065626	00	AC	101	12065662	54074466	16048875 (4 #AT-BLU)	SEE NOTE 8
12065627	00	AC	101	12065662	54074466	12065663 (5 #AT-GRN)	SEE NOTE 8



NOTES

1. UNLESS OTHERWISE SPECIFIED AND/OR INDICATED:
   DIMENSIONS ARE TO FACE OF VIEW SHOWN AND AUTOMATICALLY ROUNDED BY COMPUTER FOR INSPECTION USE. MATH NOTES FOR PRECISE DIMENSIONS. FOR TOOL BUILD, USE MATH NOTES FOR PRECISE DIMENSIONS. FOR TOOL BUILD, USE MATH MODEL FOR PRECISE TOOL PATH DATA. SYMMETRICAL ABOUT CENTERLINE.
2. SEALING CODE 2 - DESIGN WILL PASS SALT FOG TEST AFTER EXPOSURE TO CORROSIVE ATMOSPHERES PER GM4298P (NEUTRAL SALT FOG TEST FOR 240 HOURS). TESTING SHOULD CONSIDER, BUT NOT BE LIMITED TO, MATING CONNECTORS, ETC. WHEN MATED TO MATING PART OR EQUIVALENT.
3. MATING PART AS SHOWN.
4. FOR LEAD LENGTH CALCULATIONS, DISTANCE FROM MATING END OF CONNECTOR TO FRONT OF CABLE CONE IS 15.09±11.05
5. WHEN PARTS ARE SHIPPED, THEY MUST BE PACKED IN PLASTIC BAGS OR SHIPPING CONTAINERS MUST BE LINED WITH PLASTIC. ALL OPEN CAVITIES OR LINERS MUST BE SEALED TO AVOID ENTRY OF FOREIGN MATTER.
6. CROSS REFERENCE:

A	B
C	D
E	F
CONN CAVITY INDEX NO	RELAY CIRCUIT NO

7. FOR APPLICATION DATA SEE THE INDIVIDUAL APPLICATION DRAWINGS.
8. NO PROCESSING OIL ALLOWED TO BE ADDED TO AID IN THE APPLICATION OF THE SEAL TO THE CONNECTOR.
9. THIS PRODUCT IS NOT CATEGORIZED AS AN APPEARANCE ITEM. MINOR IMPERFECTIONS INCLUDING, BUT NOT LIMITED TO, FLOW MARKS, COLOR VARIATIONS, GATE MARKS, EJECTOR PIN MARKS, SLIDE MARKS, MOLD PARTING LINE, FLASH, OR FUNCTION OF THE PART ARE NORMALLY ACCEPTABLE PER GMW15487.
10. SHALL LUBRICANT CAN BE USED AS AN AUXILIARY SUPPORT ON THE CABLE INSTALLATION PROCESS.

DELPHI
DELPHI CORPORATION
TROY, MI 48098
COPYRIGHT 1998, 2006, 2007, 2008 DELPHI AUTOMOTIVE SYSTEMS, LLC.
ALL RIGHTS RESERVED.
THIS DRAWING IS THE PROPRIETARY PROPERTY OF DELPHI AUTOMOTIVE SYSTEMS, LLC. IT IS LOANED SUBJECT TO THE AGREEMENT THAT IT WILL NOT BE REPRODUCED, COPIED, LENT OR DISCLOSED TO A THIRD PARTY, OR USED FOR ANY PURPOSE WHATSOEVER, WITHOUT THE EXPRESS WRITTEN PERMISSION OF DELPHI AUTOMOTIVE SYSTEMS, LLC.

PART DRAWING

DELPHI CONFIDENTIAL SPECIFICATION
THIS DRAWING IS THE PROPRIETARY PROPERTY OF DELPHI AUTOMOTIVE SYSTEMS, LLC. IT IS LOANED SUBJECT TO THE AGREEMENT THAT IT WILL NOT BE REPRODUCED, COPIED, LENT OR DISCLOSED TO A THIRD PARTY, OR USED FOR ANY PURPOSE WHATSOEVER, WITHOUT THE EXPRESS WRITTEN PERMISSION OF DELPHI AUTOMOTIVE SYSTEMS, LLC.

PROG A - REFERENCE	2007/08
PROG A - BRANDED	2007/08
PROG A1 - MODIFIED	2007/08

DESCRIPTION OF DOCUMENT NOT RELEASED (WITHOUT PART NO. ONLY)

TAB ASM CONN F MP 6.30 SLD

12065665

12065665

12065665

12065665

12065665

12065665