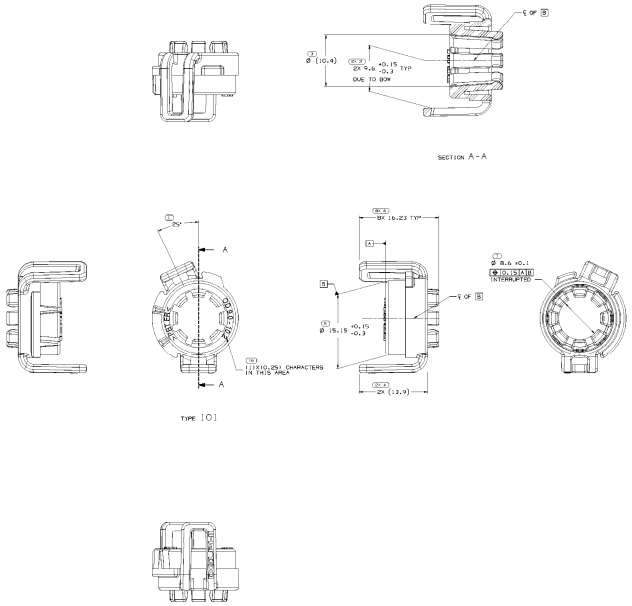


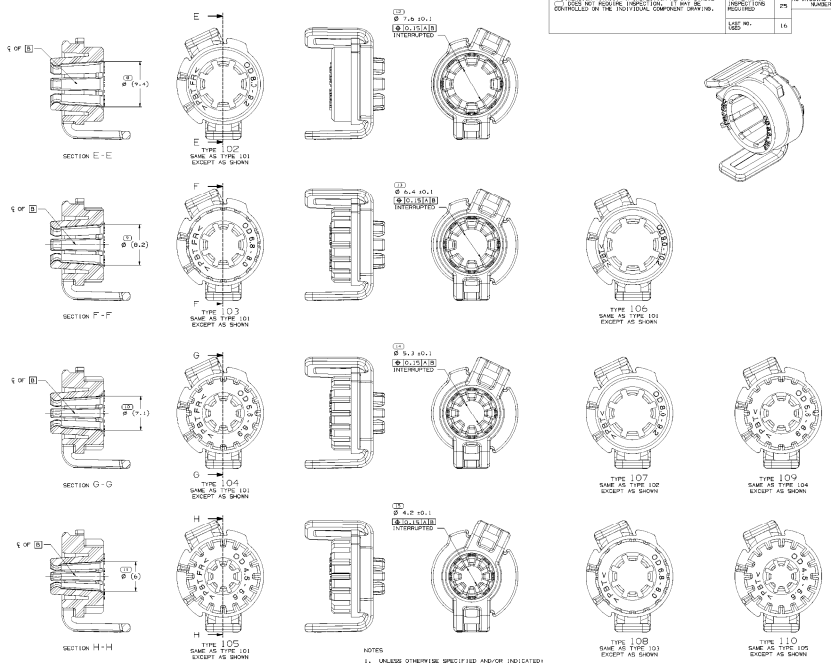


| SYMBOL DEFINITION | | MISSING SYMBOLS |
|---|---|---|
| A DIMENSION WITHOUT AN INSPECTION REPORT SYMBOL DOES NOT REQUIRE INSPECTION. IT MAY BE CONTROLLED ON THE PROTOTYPAL COMPONENT DRAWING. | TOTAL NO OF INSPECTIONS REQUIRED 275 | NO MISSING SYMBOL NUMBER |
| | LAST NO. USED 16. | |

| REVISION HISTORY | | |