SYMBOL DEFINITION		
A DIMENSION WITHOUT AN INSPECTION REPORT SYMBOL ( ) DOES NOT REQUIRE INSPECTION. IT MAY BE CONTROLLED ON THE INDIVIDUAL COMPONENT DRAWING.	TOTAL NO OF INSPECTIONS REQUIRED	28
	LAST NO. USED	8

MISSING SYMBOLS

NO MISSING SYMBOL NUMBER

DWG STATUS					ZONE	REVISION HISTORY	AUTH	DR	APVD I.E.	APVD
DATE	STN	REV	W/P	CHG						
11AP95	R	A	-	-	-	WAS PE0439B7 & RELEASED	950005	JMH	JMH	JET
06DE95	R	B	-	-	-	CHANGED MATERIAL SPEC	169895	MRG	MRG	JGS
27FE96	R	B1	-	-	-	REVISED	170803	LMD	LMD	MYA
09AP98	R	B2	-	-	-	REVISED GRAPHICS	185367	KSH	KSH	CMP
19MR01	R	B3	-	-	-	UPDATED PDM ATTRIBUTES	217386	MMM	MRL	BCD
26AU05	R	B4	-	-	-	MAT'L SPEC WAS R0071784, ADDED MAT'L RECYCLE, LOGO AND AUTO FEEDING NOTES	271679	TAI	TAI	RL

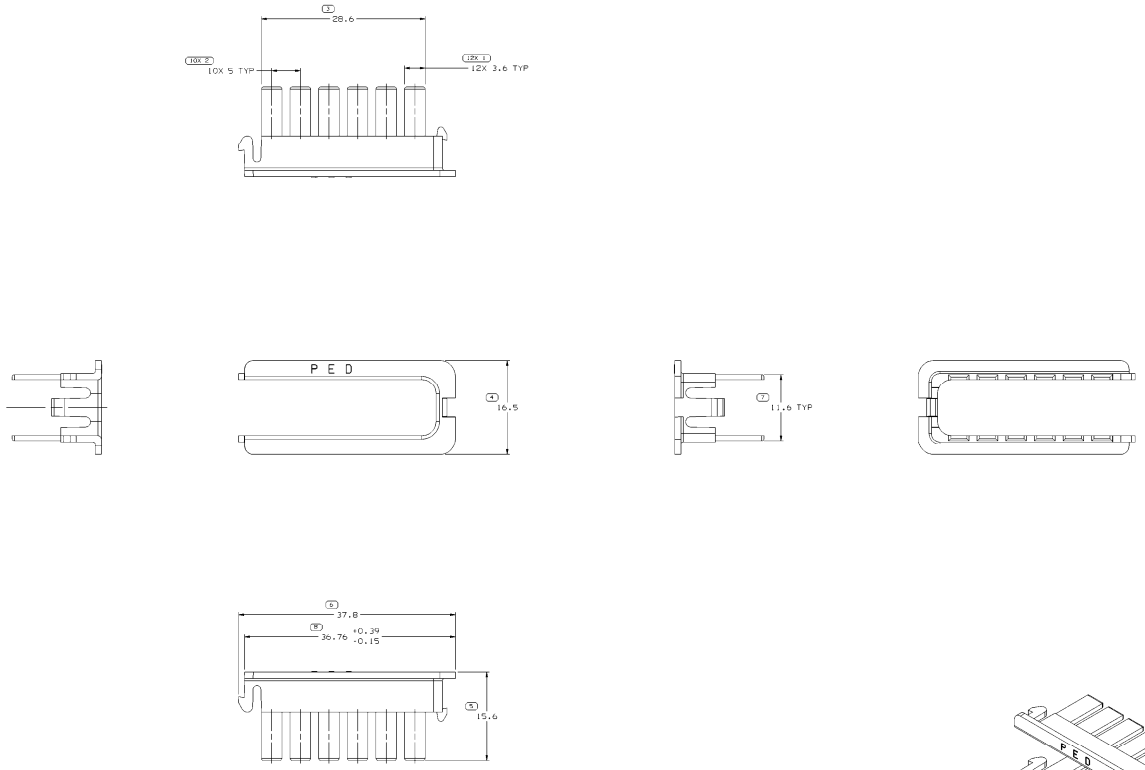

NOTES

1. UNLESS OTHERWISE SPECIFIED AND/OR INDICATED:

   DIMENSIONS ARE TO FACE OF VIEW SHOWN AND AUTOMATICALLY ROUNDED BY COMPUTER FOR INSPECTION (SEE MATH MODEL FOR PRECISE DIMENSIONS). FOR ALL OTHER DIMENSIONS NOT SHOWN BUT REQUIRED FOR TOOL BUILD, SEE MATH MODEL FOR PRECISE TOOL PATH DATA.

2. MATERIAL RECYCLING CODE PER ISO 11469. (1.5)X(0.1) CHARACTERS AS SHOWN TO BE LOCATED ON ANY EXTERIOR SURFACE. OPTIONAL CONSTRUCTION TO BE NO RECYCLING CODE.

3. THIS PART IS NOT CONTROLLED FOR AUTOMATIC FEEDING.

4. REFERENCE MATING COMPONENTS OR EQUIVALENT:

   CONNECTOR 12176505 & 12176506

5. (1.5)X(0.1) DELPHI CORPORATE BRAND TO BE LOCATED ON ANY EXTERIOR SURFACE, PREFERABLY VISIBLE AT FINAL ASSEMBLY. OPTIONAL CONSTRUCTION FOR EXISTING TOOLING MAY BE "PED".

| NUMERICAL BASIC UNIT | | | | | |