STRAP MOUNTING

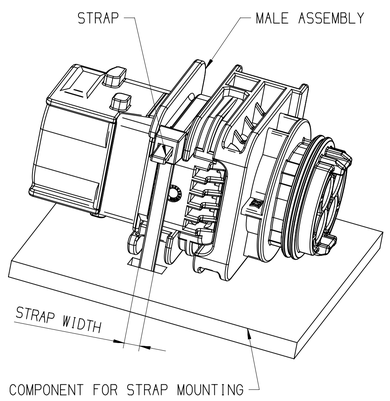

REMARK:
- MAX STRAP WIDTH 4.8MM

COMPONENT FOR STRAP MOUNTING

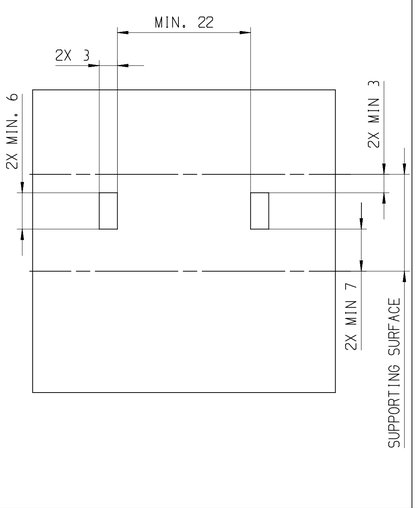

POSITION	1								2		3
NAME	HOUSING STRAP MOUNT								SECONDARY LOCK		SL SEAL
MATERIAL	PBT GF30 FR17				PBT GF30				PBT GF30 FR17	PBT GF30	LSR 50 SHORE
COLOR:	BLACK	GRAY	GREEN	BLUE	BLACK	GRAY	GREEN	BLUE	ORANGE	YELLOW	REDDISH-BROWN
PART-NO.:	33308619	33308620	33308622	33308625	33346509	33347328	33347332	33347335	33308630	33346468	33283927

ASSEMBLY-NO.:	PART-REV	CODING	MATERIAL/WEIGHT										
				-	---	---	---	---	---	---	---	---	---
33308978	01	CODE A	ALL PARTS VO / 16,6	-	1	---	---	---	---	---	---	1	---	1
33308979	01	CODE B		-	---	1	---	---	---	---	---	1	---	1
33308980	01	CODE C		-	---	---	1	---	---	---	---	1	---	1
33308981	01	CODE D		-	---	---	---	1	---	---	---	1	---	1
~~33346866~~	01	CODE A	ALL PARTS NVO / 16,1	-	---	---	---	---	1	---	---	---	1	1
~~33347795~~	01	CODE B		-	---	---	---	---	---	1	---	---	1	1
~~33347798~~	01	CODE C		-	---	---	---	---	---	---	1	---	1	1
~~33347799~~	01	CODE D		-	---	---	---	---	---	---	---	1	1	1

①

DWG STATUS DATE	STG	REV	N/P	CHG	ZONE	REVISION HISTORY	AUTH	DR	APVD 1	APVD 2
250C18	R	01				INITIAL RELEASE		P.NAJ	M.ZYR	M.GRU
29MR19	R	01	AA		B7 A7	REFERENCE HELLERMANN TYTON DWG-NO. ADDED CLIP REFERENCE CHANGED		K.FAR	M.GRU	K.PIT
150C19	R	01	AB		B7 G10	PROTECTION CAP APTIV DWG-NO.: 35391874 WAS 35274875 PART AVAILABILITY FOR PART NUMBERS 33346866, 33347795, 33347798, 33347799 UPDATED		P.NAJ	M.GRU	M.SKR
280C20	R	01	AC		B7	HT DWG-NO: 18-0195-001-CSG WAS 17-0195-001-CSG		P.NAJ	M.GRU	

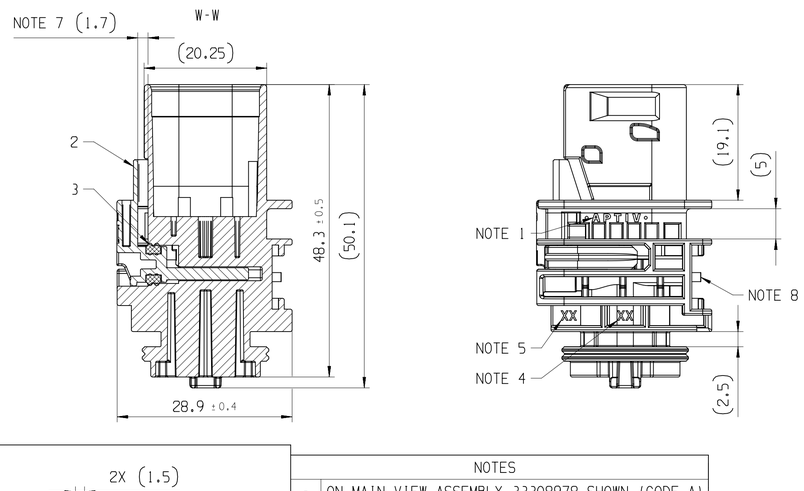

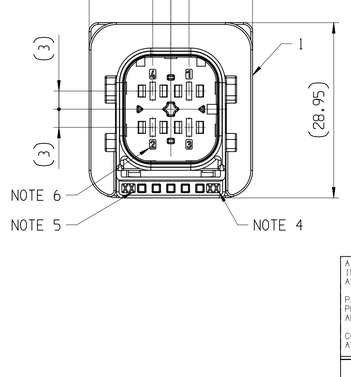

SCALE: 1 : 1

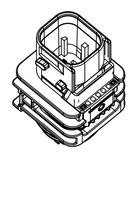

CODE A

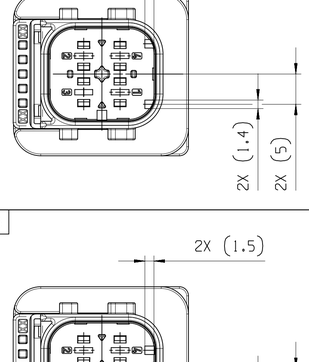

CODE C

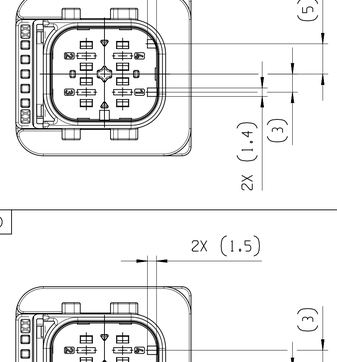

CODE B

CODE D

NOTES	
-	ON MAIN VIEW ASSEMBLY 33308978 SHOWN (CODE A)
-	DELIVERED CONDITION AS ON MAIN VIEWS - SECONDARY LOCK IN OPEN POSITION
-	ASSEMBLY INSTRUCTION NO.: 35269104-CUS71 - PRELIMINARY ASSEMBLY 35269104-CUS72 - HARNESS ASSEMBLY 35269103-CUS73 - CAR ASSEMBLY
-	MATING PARTS: - 4 WAY 2.8 FEMALE CONNECTOR ASM DWG-NO.: 35095833 - BACKSHELL 90 DEG APTIV DWG-NO.: 35024558 (HT DWG-NO.: 18-0195-001-CSG) ① - BACKSHELL 180 DEG APTIV DWG-NO.: 35024559 (HT DWG-NO.: 17-0598-001-CSG) - PROTECTION CAP APTIV DWG-NO.: 35391874 (HT DWG-NO.: 17-2270-001-CSG) ①
-	MATING TERMINAL SYSTEM: - 2.8 TERMINAL DWG-NO.: 13548085 MAX WIRE CROSS SECTION: 2.5MM²
1	APTIV LOGO
2	MATERIAL NAME ACCORDING TO VDA 260
3	DATE INSERT
4	TOOL CAVITY NUMBER
5	INDEX REPLACEMENT INSERT
6	PART CAVITY NUMBER
7	MOVING DISTANCE OF SECONDARY LOCK
8	INTERFACE FOR CLIP MOUNTING HT CLIP NUMBER: YCCSFT6.5PT0.8-2.5; FT6LG.M.St.Aufn.II ①

A ——— LINE DRAWN THROUGH A PART NUMBER INDICATES THAT PHYSICAL PARTS ARE NOT AVAILABLE FOR ORDERING.

PART NUMBERS THAT DO NOT HAVE A LINE PRESENT INDICATE THAT PHYSICAL PARTS ARE AVAILABLE FOR ORDERING.

CONTACT APTIV SALES TO ASSURE AVAILABILITY OF PARTS.

SHARP CORNER TOLERANCE

DIM TO CHECK / ( ) DIM FOR HELP / THEORETIC DIM	DIMENSIONAL RANGE (MM) FROM	TO	CHART E1								
	FROM	TO	> 0 20	> 20 30	> 30 70	> 70 100	> 100 150	> 150 200	> 200 250	> 250 300	> 300 400
	TOLERANCE UNLESS OTHERWISE SPECIFIED										
			±0.15	±0.2	±0.3	±0.4	±0.5	±0.6	±0.8	±1	±1.2
	ANGULAR TOLERANCE ±2°										

DWG TYP: PART DRAWING

WEIGHT (GR): SEE CHART

VOLUME (CM³): ---

ROUTING:

DISTR CODE: D

UNLESS OTHERWISE SPECIFIED

GENERAL TOLERANCES ACCORDING TO: SEE CHART

GD&T ACCORDING TO: ISO 1101

REFERENCE

FIRST ANGLE PROJECTION

DO NOT SCALE

USE MATH DATA

CAD NX

•APTIV•

CONNECTION SYSTEMS
KRAKOW, POLAND

COPYRIGHT 2018 APTIV. ALL RIGHTS RESERVED.

THIS DRAWING IS THE PROPERTY OF APTIV AND CONTAINS APTIV CONFIDENTIAL INFORMATION. THE REPRODUCTION, DISTRIBUTION AND UTILIZATION OF THIS DOCUMENT OR ITS RELATED CAD MATH DATA, AS WELL AS COMMUNICATION OF ANY CONTENT TO OTHERS, WITHOUT EXPRESS AUTHORIZATION, IS PROHIBITED.

TEN RYSUNEK JEST WLASNOSCIA APTIV I ZAWIERA POUFNE INFORMACJE POWIELANIE, ROZPOWSZECHNIANIE I WYKORZYSTYWANIE TEGO DOKUMENTU LUB ZWIAZANYCH Z NIM DANYCH CAD, JAK RÓWNIEZ PRZEKAZYWANIE INNYM JAKIEJKOLWIEK ICH ZAWARTOSCI, BEZ NADANIA WYRAZNYCH UPRAWNIEN, JEST ZABRONIONE

		DATE
DR	P.NAJDUCH	240C18
APVD1	M.ZYROMSKI	250C18
APVD2	M.GRUDZEWSKI	260C18
APVD3		
APVD4		
APVD5		

SUBSTANCES OF CONCERN AND RECYCLED CONTENT PER APTIV 10949001
SUBSTANCJE NIEBEZPIECZNE I POWTORNIE PRZETWORZONE OKRESLA APTIV 10949001

MATERIAL: SEE CHART

DRAWING NAME: 4 WAY 2.8 CTCS STRAP MOUNT MALE ASSEMBLY

DRAWING NUMBER: 35096188

SIZE	SCALE	FRAME NO	SHEET NO	STG	REV	N/P
A1	2:1	1 OF 1	1 OF 1	R	01	AC

CONTROLLED DOCUMENTS ARE ONLY AVAILABLE ON THE SERVER

User: szc9wx Date: 30-paź-20 Time: 16:35:31
Dwg: 35096188_CUS01-S01/01AC
czc9wx;10302020;16:34;591pass.pnr