SYMBOL DEFINITION			MISSING NUMBERS
A DIMENSION WITHOUT AN INSPECTION REPORT SYMBOL (□) DOES NOT REQUIRE INSPECTION. IT MAY BE CONTROLLED ON AN INDIVIDUAL COMPONENT DRAWING.	TOTAL NO. OF SYMBOLS ON DRAWING	8	
	LAST NO. USED	8	

DWG STATUS DATE	STG	REV	N/P	CHG	ZONE	REVISION HISTORY	AUTH	DR	APVD 1	APVD 2
170C00	R	21	-	-		ALL ACTIVE PARTS - ADDED REVISION COLUMN PER 148574	204031	RVP	RVP	RC
03AU04	R	22	-	-		02977253 - MAT'L SPEC WAS R-67550; 02977378 - MAT'L SPEC WAS PM-661-001; & 06288219 - MAT'L SPEC WAS R-71793; ALL ACTIVE PARTS - REVISED NOTES	257213	TLD	TLD	ET
27SE05	R	23	-	-		06288219 - MAT'L SPEC WAS M3592002	27276B	CCV	FRG	ET
12MR07	R	24	-	-		06288219 - OBSOLETE	400766	JBD	JAA	JBS

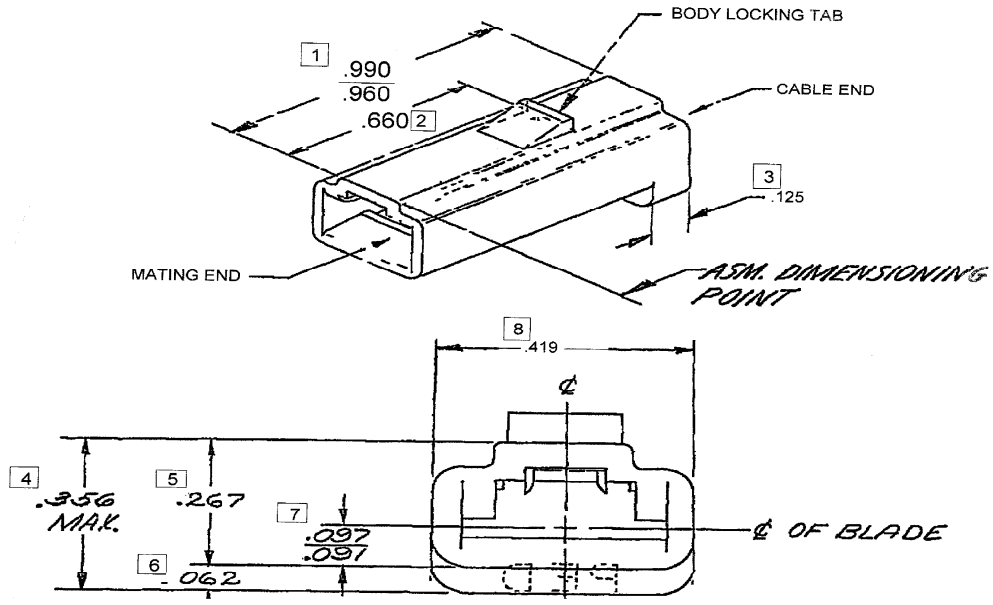

NOTES

1. UNLESS OTHERWISE SPECIFIED AND/OR INDICATED:

   DIMENSIONS ARE TO FACE OF VIEW SHOWN AND AUTOMATICALLY ROUNDED BY COMPUTER FOR INSPECTION (SEE MATH MODEL FOR PRECISE DIMENSIONS). FOR ALL OTHER DIMENSIONS NOT SHOWN BUT REQUIRED FOR TOOL BUILD, SEE MATH MODEL FOR PRECISE TOOL PATH DATA.

2. MATERIAL RECYCLING CODE PER ISO 11469. (.080)X(.004) RAISED CHARACTERS AS SHOWN TO BE LOCATED ON ANY EXTERIOR SURFACE. OPTIONAL CONSTRUCTION TO BE NO MATERIAL RECYCLING CODE.

3. REFERENCE MATING COMPONENTS OR EQUIVALENT:

   CONNECTOR 02973779

4. (.080)X(.004) RAISED DELPHI CORPORATE BRAND TO BE LOCATED ON ANY EXTERIOR SURFACE. PREFERABLY VISIBLE AT FINAL ASSEMBLY. OPTIONAL CONSTRUCTION TO BE "PED" OR NO LOGO.

5. ENVIRONMENTAL PROTECTION ACCORDING TO OPEL SPECIFICATION GU 000 001-CADMIUM

PART NO	REV	N/P	STATUS	MATERIAL SPECIFICATION AND COLOR	REMARKS
06288219	08	AA	OBSOLETE	M3592024 PA66 HS IM CRM	-
02989922	G	-	OBSOLETE	R-67662 - A.B.S. (NAT)	MUST BE MADE IN MOLD #M-1
02977253	08	-	-	M2097001 PP IM BLK	SEE NOTE #5
02973778	08	-	-	M2097002 PP IM NAT	-

(N/A) PROCESS SENSITIVE DIMENSION

DIMENSIONS ENCLOSED IN ( ) INDICATE REFERENCE DIMENSIONS AND NO TOLERANCE LIMITS ARE ESTABLISHED

DIMENSIONAL RANGE (IN)	CHART H
FROM 0 (>.76) (>1.78) (>2.79)	±.005
TO .76 (1.78) (2.79) 4.00	

TOLERANCE UNLESS OTHERWISE SPECIFIED

±.005	±.010	±.012	±.016	±.020

ANGULAR TOLERANCE ±2°

THIRD ANGLE PROJECTION

DO NOT SCALE

USE MATH DATA

DWG TYPE: PART DRAWING

STYLE

VOLUME (CM³) | DISTR CODE

UNLESS OTHERWISE SPECIFIED
THIS DOCUMENT IS IN ACCORDANCE WITH ASME Y14.5M-1994 AS AMENDED BY THE IMI GLOBAL DIMENSIONING AND TOLERANCING ADDENDUM-2001. SEPARATE PATTERNS OF FEATURES MAY BE MADE SEPARATELY REGARDLESS OF DATUM REFERENCES.

ALL DIMENSIONS ARE IN INCHES

REFERENCE

DELPHI

DELPHI PACKARD ELECTRICAL/ELECTRONIC ARCHITECTURE
WARREN, OH

		DATE
DR		
APVD1	TOM MUDREY	21NO60
APVD2	DON THIRY	04AU66
APVD3	LUBERT	10AU66
APVD4		
APVD5		

SUBSTANCES OF CONCERN AND RECYCLED CONTENT PER DELPHI 10949001

MATERIAL: SEE CHART

DRAWING NAME: TAXI CONN F 56 SERIES

DRAWING NUMBER: 02977252

SIZE	SCALE	FRAME NO	SHEET NO	STG	REV	N/P
A1	NONE	1 OF 1	1 OF 1	R	24	-

User: 10104
Date: 02/07/2011 1:09:50 PM Date: 2 Nov 07 Time: 17:25
Wasson