SYMBOL DEFINITION			MISSING SYMBOLS
A DIMENSION WITHOUT AN INSPECTION REPORT SYMBOL, IT DOES NOT REQUIRE INSPECTION. IT MAY BE CONTROLLED ON THE INDIVIDUAL COMPONENT DRAWING.	TOTAL NO OF INSPECTIONS REQUIRED	210	NO MISSING SYMBOL NUMBER
	LAST NO. USED	15	

REVISION HISTORY										
DR STATUS										
DATE	DR	SHEET	ITEM		REVISION HISTORY			ECN	DR	APPROVED
12MAR97	R	B3	-		CREATED PN & MATERIAL SPEC WAS R0130111			2070441	RB	RM RT
16APR97	R	B4	-		ADDED NOTES			2020962	DH	DH RT
30NOV99	R	B5	-	-	REDRAW PART DRAWING USED AUTOCAD CONVERSION.			2060374	MSC	BMS DH
08NOV01	R	B6	-	-	ADDED APPLICATION DATA WITH NO REMOVED WITHS COMP & INSERTION COMP INFORMATION			4125484	MM	MM MLS
22JUN06	R	B7	-	-	REVISED WITL RECYCLING CODE NOTE			4144204	MMR	SYLMM

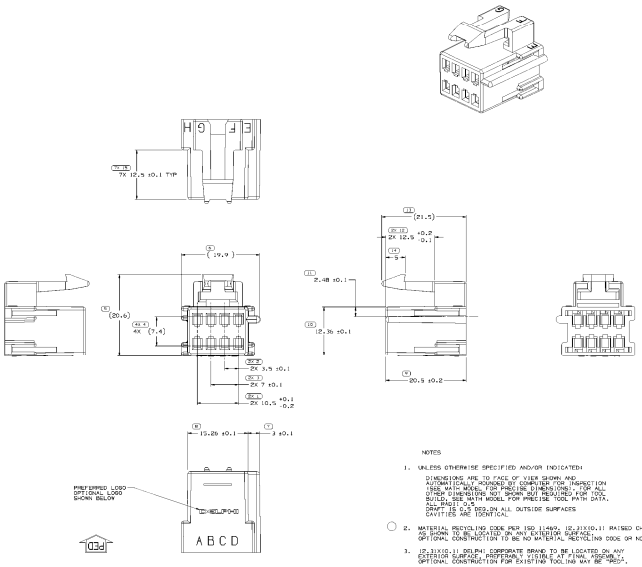

NOTES

1. UNLESS OTHERWISE SPECIFIED AND/OR INDICATED:

   DIMENSIONS ARE TO FACE OF VIEW SHOWN AND AUTOMATICALLY PROVIDED BY COMPUTER FOR INSPECTION USES MATH MODEL FOR PRECISE DIMENSIONS). FOR ALL DIMENSIONS, USE MATH MODEL FOR PRECISE TOOL PATH DATA. BUILD, USE MATH MODEL FOR PRECISE TOOL PATH DATA. ALL RADII: 0.5
   DRAFT: IS USE DEG.ON ALL OUTSIDE SURFACES
   CAVITIES ARE IDENTICAL

2. MATERIAL RECYCLING CODE PER ISO 11469, 12.31X10.11 RAISED CHARACTERS AS SHOWN TO BE LOCATED ON ANY EXTERIOR SURFACE. OPTIONAL CONSTRUCTION TO BE NO MATERIAL RECYCLING CODE OR NO LOGO.

3. 12.31X10.11 DELPHI CORPORATE BRAND TO BE LOCATED ON ANY EXTERIOR SURFACE, PREFERABLY VISIBLE AT FINAL ASSEMBLY. OPTIONAL CONSTRUCTION FOR EXISTING TOOLING MAY BE "PEDS".

4. THIS CONNECTOR WILL PASS THROUGH A 25 DIA. MIN HOLE

5. THIS PART IS NOT CONTROLLED FOR AUTOMATIC FEEDING

6. FOR POLYESTER IN-PROCESS MOISTURE AND PART DEGRADATION LIMITS SEE ESO-1 NOC.

7. FOR APPLICATION DATA SEE THE APPLICATION DRAWING.

8. THIS PRODUCT IS NOT CATEGORIZED AS AN APPEARANCE ITEM. MINOR IMPERFECTIONS INCLUDING, BUT NOT LIMITED TO, FLOW MARKS, COLOR BLEMISHES, SPLAY, WELD LINES, AND SHIFT LINES THAT DO NOT AFFECT THE FIT, FORM, OR FUNCTION OF THE PART ARE PERMISSIBLE PER NAP 4.10.10.

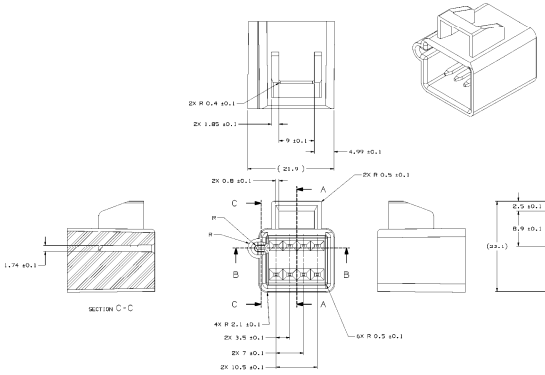

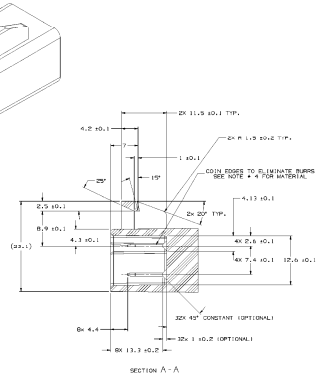

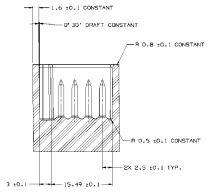

NOTES

1. UNLESS OTHERWISE SPECIFIED AND/OR INDICATED:

   DIMENSIONS ARE TO FACE OF VIEW SHOWN AND AUTOMATICALLY PROVIDED BY COMPUTER FOR INSPECTION USES MATH MODEL FOR PRECISE DIMENSIONS). FOR ALL DIMENSIONS, USE MATH MODEL FOR PRECISE TOOL PATH DATA. BUILD, USE MATH MODEL FOR PRECISE TOOL PATH DATA. ALL RADII: 0.5 DRAFT: IS .5 DEG. MAX ON ALL OUTSIDE SURFACES.

2. TERMINALS MUST WITHSTAND A MINIMUM PUSHOUT FORCE OF 89 N (20 LBS)

3. RECOMMENDED BODY MATERIAL:POLYESTER OR EQUIVALENT THERMOPLASTIC

4. REFER TO USCAR ENCAPOSI DRAWING (BLADE GEOMETRY. MATERIAL & PLATING)

DRAWING TYPE	PART DRAWING
STYLE	
MASS (KG)	0.046
SCALE	2:1
UNITS (PRIMARY)	MILLIMETERS
UNITS (SECONDARY)	INCHES
TOLERANCES (UNLESS OTHERWISE SPECIFIED)	LINEAR ±0.25 ANGULAR ±0.25°
MATERIAL	POLYESTER COMPOUND BLUE
FINISH	
SPECIFICATION	
DRAWING NUMBER	12064766
SHEET	1 OF 2
REVISION	B7

DELPHI
SUPPLIER ELECTRICAL/ELECTRONIC ARCHITECTURE
PAGE 1 OF 2

DR	JAMES SOTA	12JUN97
CHK	E.HERNANDELLO	12JUN97
APPR	E.HERNANDELLO	12JUN97
APPR	L.TRIPLET	30JUN97
APPR		
APPR		

SUBSTITUTE OF CONTROL OR PROCESS CHARACTERISTICS (SCC/KCC/OTHER)
NONE

DRAWING NUMBER
12064766
SHEET 1 OF 2 REVISION B7

DELPHI