SYMBOL DEFINITION		
A DIMENSION WITHOUT AN INSPECTION REPORT SYMBOL (□) DOES NOT REQUIRE INSPECTION. IT MAY BE CONTROLLED ON THE INDIVIDUAL COMPONENT DRAWING.	TOTAL NO. OF INSPECTIONS REQUIRED	9
	LAST NO. USED	7

MISSING SYMBOLS
NO MISSING SYMBOL NUMBER

DWG STATUS DATE	STS	REC	N/P	DIB	ZONE	REVISION HISTORY	AUTH	DR	APVD 1	APVD 2
13N002	R	31	-	-		REDRAWN TO PO	233339	JVD	JVD	DM
13JA03	R	32	-	-		UPDATED POM ATTRIBUTES	235437	JVD	JVD	DM
01FE06	R	33	-	-		12089247 - MAT'L SPEC WAS W3592002	276997	RTV	JAMES	
05JN07	R	34	-	-		ALL PARTS - UPDATED MATERIAL SPEC AND REMOVED RECYCLING CODE AND NOTE	431610	EDS	AXD	BDG
16FE18	R	35	-	-		ADDED TYPE 102	439692	FJS	MS	MF
16OC18	R	36	-	-		ADDED DIM 6 & DIM 7	441298	PGT	MS	JAM

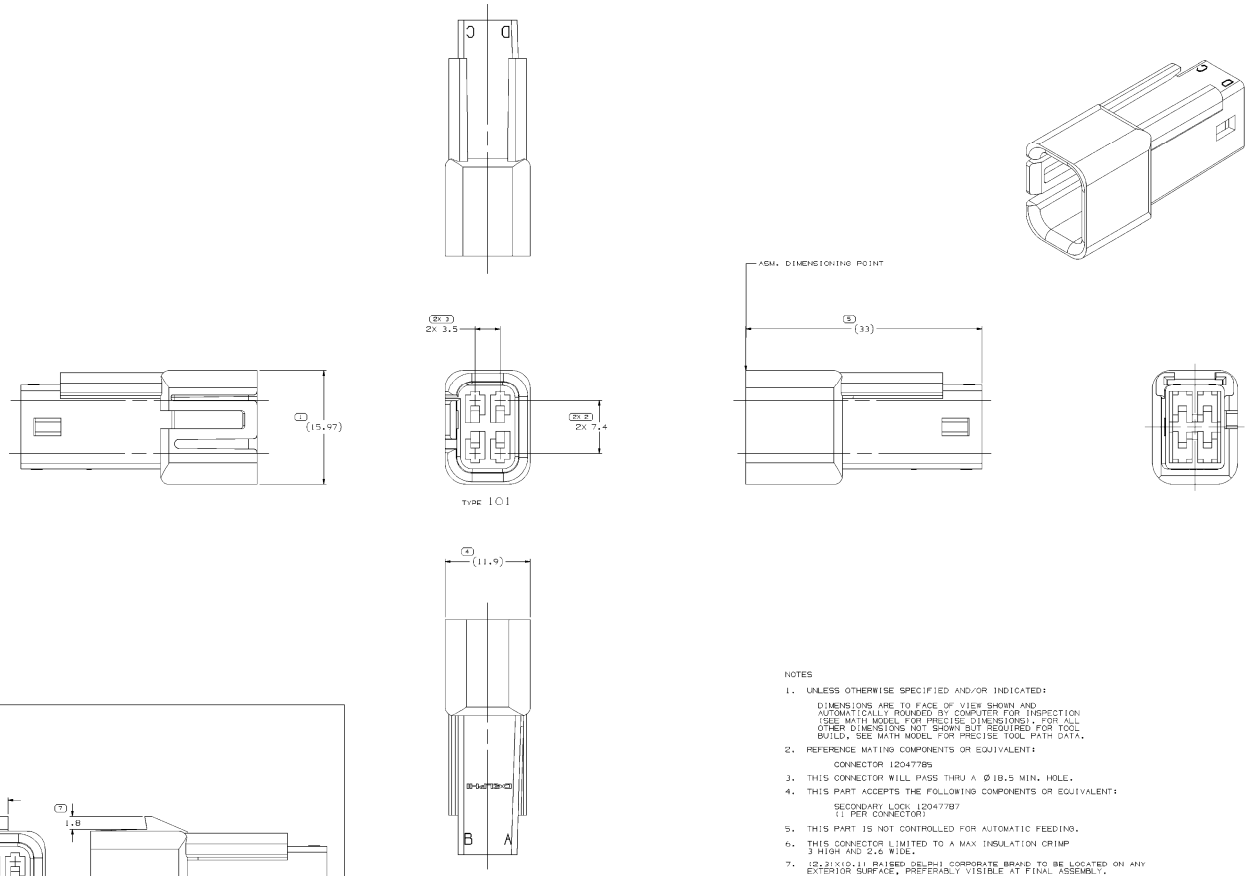

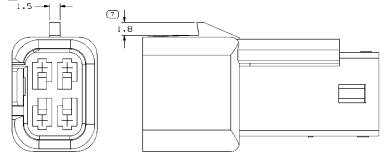

TYPE 102
SAME AS TYPE 101
EXCEPT AS SHOWN

NOTES

1. UNLESS OTHERWISE SPECIFIED AND/OR INDICATED:

   DIMENSIONS ARE TO FACE OF VIEW SHOWN AND AUTOMATICALLY ROUNDED BY COMPUTER FOR INSPECTION (SEE MATH MODEL FOR PRECISE DIMENSIONS). FOR ALL OTHER DIMENSIONS NOT SHOWN BUT REQUIRED FOR TOOL BUILD, SEE MATH MODEL FOR PRECISE TOOL PATH DATA.

2. REFERENCE MATING COMPONENTS OR EQUIVALENT:

   CONNECTOR 12047785

3. THIS CONNECTOR WILL PASS THRU A Ø18.5 MIN. HOLE.
4. THIS PART ACCEPTS THE FOLLOWING COMPONENTS OR EQUIVALENT:

   SECONDARY LOCK 12047787
   (1 PER CONNECTOR)

5. THIS PART IS NOT CONTROLLED FOR AUTOMATIC FEEDING.
6. THIS CONNECTOR LIMITED TO A MAX INSULATION CRIMP 3 HIGH AND 2.6 WIDE.
7. (2.31X10.11 RAISED DELPHI CORPORATE BRAND TO BE LOCATED ON ANY EXTERIOR SURFACE, PREFERABLY VISIBLE AT FINAL ASSEMBLY. OPTIONAL CONSTRUCTION TO BE "PED" OR NO LOGO.
8. FOR APPLICATION DATA SEE THE INDIVIDUAL APPLICATION DRAWINGS.

PART NO	REV	N/P	TYPE	MATERIAL AND COLOR	MATING CONNECTOR	VOLUME (CM³)
35184255	01	AA	102	POLYAMIDE COMPOUND-BLK	12047785	2.153
12089247	02	AA	101	POLYAMIDE COMPOUND-CRM	12089248	2.142
12066037	A9	-	101	POLYAMIDE COMPOUND-WHT	12066036	2.142
12047786	A9	-	101	POLYAMIDE COMPOUND-BLK	12047785	2.142

(C) PROCESS INSPECTION STANDARDS
DIMENSIONS END CHECK AT 2 LOCATIONS
DIMENSIONS MEASURED AT 23°C ± 2°C TEMPERATURE
UNITS ARE DEVELOPED

REFERENCE

STANDARD DRAWING TOLERANCE												
FROM	0.0	2.50	6.30	10.00	16.00	25.00	40.00	63.00	100.00	160.00	250.00	400.00
TO	2.50	6.30	10.00	16.00	25.00	40.00	63.00	100.00	160.00	250.00	400.00	
TOLERANCE (±0.005 INTERPOLATE STRAIGHT LINE)												
±0.25	±0.4	±0.6	±0.8	±1.0	±1.2	±1.6	±2.0	±2.5	±3.2	±4.0	±5.0	±6.3

ZONALAR TECHNOLOGY INC.

THIS DRAWING TOGETHER WITH NUMBER INDICATES THAT PHYSICAL PARTS ARE NOT AVAILABLE FOR ORDERING.

PART NUMBERS THAT DO NOT HAVE A LINE PRESENT INDICATE THAT PHYSICAL PARTS ARE AVAILABLE FOR ORDERING.

CONTACT APTIV SALES TO ASSURE AVAILABILITY OF PARTS.

DWG TYPE: PART DRAWING

STYLE:

VOLUME (CM³): SEE CHART

SCREW CONN:

UNLESS OTHERWISE SPECIFIED
ISO13 2000DIMS IS TO ACCORDANCE WITH ISO8015 ISO14405 ISO1101 ISO2692 ISO5458 ISO5459 ISO5460 ISO5462 ISO5464 ISO5465 ISO5466 ISO5467 ISO5468 ISO5469 ISO5470 ISO5472 ISO5473 ISO5474 ISO5475 ISO5476 ISO5477 ISO5478 ISO5479 ISO5480 ISO5481 ISO5482 ISO5483 ISO5484 ISO5485 ISO5486 ISO5487 ISO5488 ISO5489 ISO5490 ISO5491 ISO5492 ISO5493 ISO5494 ISO5495 ISO5496 ISO5497 ISO5498 ISO5499 ISO5500 ISO5501 ISO5502 ISO5503 ISO5504 ISO5505 ISO5506 ISO5507 ISO5508 ISO5509 ISO5510 ISO5511