SYMBOL DEFINITION			MISSING NUMBERS
A DIMENSION WITHOUT AN INSPECTION REPORT SYMBOL ( ) DOES NOT REQUIRE INSPECTION. IT MAY BE CONTROLLED ON AN INDIVIDUAL COMPONENT DRAWING.	TOTAL NO. OF SYMBOLS ON DRAWING	11	
	LAST NO. USED	12	

DWG STATUS DATE	STG	REV	N/P	CHG	ZONE	REVISION HISTORY	AUTH	DR	APVD I.E.	APVD E.E.
12NOV99	R	01	-	-	-	ALL PARTS - ADDED DIM	196852	EDV	BMC	JA
05MY01	R	02	-	-	-	REVISED MATERIAL FROM R006436 TO R0271784 FOR 12020803.	209713	OT	OT	RC
20SE01	R	03	-	-	-	UPDATED MATERIAL SPEC. - ALL PARTS	213806	OT	OT	RC
28JA04	U	04	-	-	-	ALL PARTS - ADDED NOTE TO AREA ON CONNECTOR WHERE PULLOUT RIBS ARE ACCEPTABLE. UPDATED MATERIAL SPECS.	250663	LL	LL	TM
25FE04	R	05	-	-	-	ALL PARTS - CORRECTED REVISION LEVELS REVISED DIM 12 NOTE TO STATE "OPTIONAL"	251796	LL	LL	TM

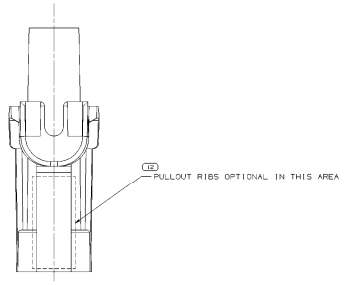

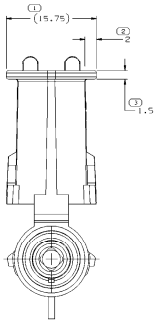

TYPE 102
SAME AS TYPE 101
EXCEPT AS SHOWN

INDEX CODE
-1-
(ALSO SEE HANDBOOK)

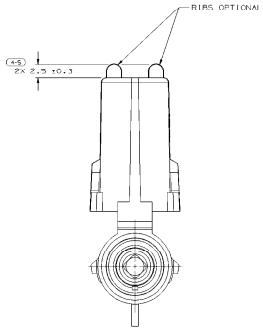

TYPE 101

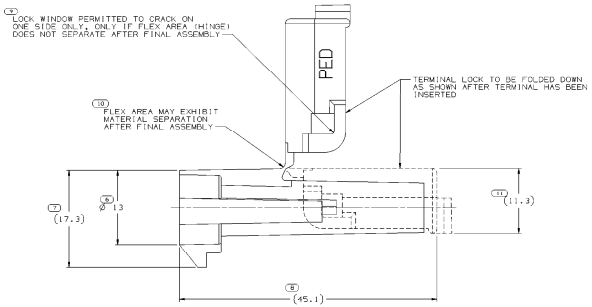

NOTES:

1. UNLESS OTHERWISE SPECIFIED AND/OR INDICATED:
   DIMENSIONS ARE TO FACE OF VIEW SHOWN AND AUTOMATICALLY ROUNDED BY COMPUTER FOR INSPECTION. (SEE MATH MODEL FOR PRECISE DIMENSION)
   FOR ALL OTHER DIMENSIONS NOT SHOWN BUT REQUIRED FOR TOOL BUILD, SEE MATH MODEL FOR PRECISE TOOL MATH DATA.

2. MATING COMPONENTS OR EQUIVALENT:
   CONNECTOR 12015781
   CABLE SEAL 12015323
   TERMINAL 12089040

3. SEALING CODE 3.

4. CAUTION: DO NOT ATTEMPT TO COPY THIS DRAWING WHEN DESIGNING A MATING PART TO A WEATHER PACK CONNECTOR. PLEASE REQUEST THE LATEST COPY OF DRAWING NUMBER 12020084 FROM THE PACKARD ELECTRIC DIVISION.

5. (2.3)X(0.1) RAISED DELPHI CORPORATE BRAND TO BE LOCATED ON ANY EXTERIOR SURFACE, PREFERABLY VISIBLE AT FINAL ASSEMBLY. OPTIONAL CONSTRUCTION TO BE "MED" OR NO LOGO.

6. MATERIAL RECYCLING CODE PER ISO 11469, (2.3)X(0.1) RAISED CHARACTERS AS SHOWN TO BE LOCATED ON ANY EXTERIOR SURFACE. OPTIONAL CONSTRUCTION TO BE NO MATERIAL RECYCLING CODE.

PART NO	STG	REV	N/P	STATUS	TYPE	MATERIAL SPECIFICATION AND COLOR	APPLICATION	REF: TERMINAL GENDER	ASSEMBLY PART NUMBER (S)	ASM MATING PART	VOL CM³
12186965	R	A4	-		102	M3592001 PA66 HS IM BLK	IN-LINE	12089040/MALE	-	12015791	3.931
12020803	R	05	AC		101	M3592025 PA66 HS IN GRA MD	IN-LINE	12089040/MALE		12077615	3.398
12010996	R	E4	-		101	M3592001 PA66 HS IM BLK	IN-LINE	12089040/MALE	12047671	12015791	3.398

4 PROCESS SENSITIVE DIMENSION	
CORRECTION CONDITIONS: 1 DEG. C. RELATIVE HUMIDITY 50 PERCENT. 1 MPa PRESSURE. 1 METER ABS ELEVATION	
DIMENSIONAL RANGE (MM)	CHART E
FROM	0.00 0.30 0.60 1.00 3.00 6.00
TO	0.30 0.60 1.00 3.00 6.00 10.00
TOLERANCE UNLESS OTHERWISE SPECIFIED	±0.13 ±0.13 ±0.13 ±0.13 ±0.13 ±0.13
ANGLE ±0.25 DEG. ; FRACTION ±0.5	
AREA OF DRAWING 27	

THIRD ANGLE PROJECTION

DO NOT SCALE

USE MATH DATA

DWG TYPE	PART DRAWING
STYLE	
VOLUME CHART	SEE CHART
SYSTEM CODE	D
RORTING	D900,690

UNLESS OTHERWISE SPECIFIED
THIS DOCUMENT IS IN ACCORDANCE WITH ANSI Y14.5M-1994 UNLESS OTHERWISE SPECIFIED. THIS DRAWING IS PROPRIETARY TO DELPHI CORPORATION. REPRODUCTION OR DISTRIBUTION OF THIS DRAWING OR ANY PART THEREOF IS PROHIBITED WITHOUT WRITTEN PERMISSION.

ALL DIMENSIONS ARE IN MILLIMETERS

REFERENCE

DELPHI

DELPHI PACKARD ELECTRIC SYSTEMS
WARREN, OH

	DATE
DR MPV01 E. MONCISVAIS	30JL96
MPV02 E. BAEZ	05AU96
MPV03 T. MADDEN	28JA04
MPV04	
MPV05	

SUBSTANCES OF CONCERN AND RECYCLED CONTENT PER DELPHI 12999001

MATERIAL
SEE CHART

DRAWING NAME
TAXI CONN W/P SHD

DRAWING NUMBER
12020814

SIZE	SCALE	FRAME NO	SHEET NO	STG	REV	N/P
A0	4:1	1 OF 1	1 OF 1	R	05	-