DWG STATUS DATE	STG	REV	N/P	CHG	ZONE	REVISION HISTORY	AUTH	DR	APVD 1	APVD 2
24JN22	R	01				INITIAL RELEASE		R.SUR	B.THO	B.THO
110C22	R	02				DRAWING UPDATED AND DIMENSION MODIFIED NOTES TABLE MODIFIED		R.SUR	B.THO	B.THO

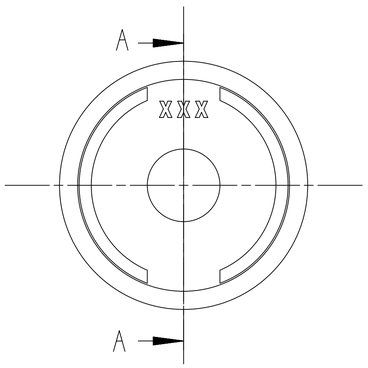

SECTION A-A

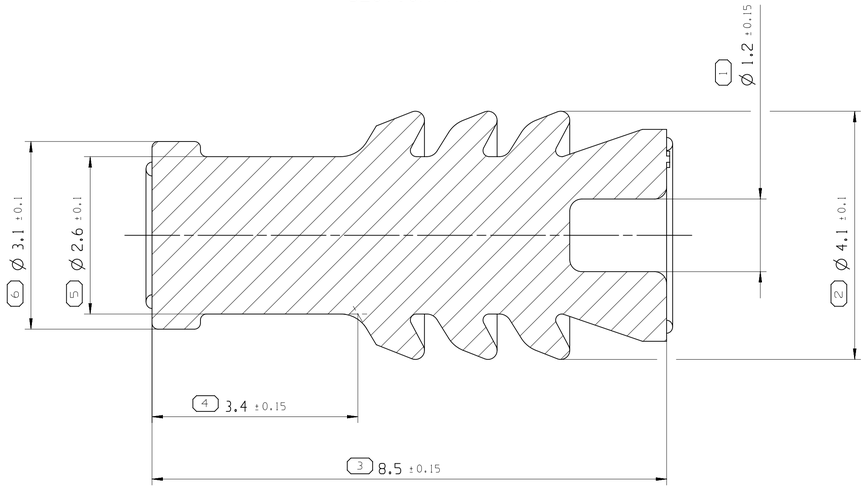

SCALE / MASSSTAB:
5:1

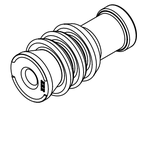

NOTES	
1	NOT DIMENSIONED GEOMETRY HAS TO BE TAKEN FROM THE CORRESPONDING 3D DATA FILE
2	MATERIAL SPECIFICATION: SILICONE
3	TENSILE STRENGTH : RM MIN 6.2 N/MM²
4	ELONGATION :MIN. 375% DIN 53504-S2
5	DUROMETER ORIGINAL: SHORE(A) 60± 5 DIN53505

A LINE DRAWN THROUGH A PART NUMBER INDICATES THAT PHYSICAL PARTS ARE NOT AVAILABLE FOR ORDERING.

PART NUMBERS THAT DO NOT HAVE A LINE PRESENT INDICATE THAT PHYSICAL PARTS ARE AVAILABLE FOR ORDERING.

CONTACT APTIV SALES TO ASSURE AVAILABILITY OF PARTS.

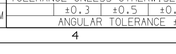

SHARP CORNER TOLERANCE

DIMENSIONAL RANGE (MM) CHART C					
FROM	>0	>25	>60	>80	
TO	25	60	80		
TOLERANCE UNLESS OTHERWISE SPECIFIED					
	±0.3	±0.5	±0.6	±0.75%	
ANGULAR TOLERANCE ±2°					

DIM TO CHECK
( ) DIM FOR HELP
THEORETIC DIM

DWG TYP
PART DRAWING

WEIGHT (GR)
SEE TABLE

VOLUME (CM³)
SEE TABLE

ROUTING
-

DISTR CODE
D

UNLESS OTHERWISE SPECIFIED

GENERAL TOLERANCES ACCORDING TO:

SEE CHART

GD&T ACCORDING TO:

ISO 1101

REFERENCE

FIRST ANGLE PROJECTION

DO NOT SCALE

USE MATH DATA

CAD NX

•APTIV•

CONNECTION SYSTEMS
Chennai, India

COPYRIGHT 2022 APTIV. ALL RIGHTS RESERVED.

THIS DRAWING IS THE PROPERTY OF APTIV AND CONTAINS APTIV CONFIDENTIAL INFORMATION. THE REPRODUCTION, DISTRIBUTION AND UTILIZATION OF THIS DOCUMENT OR ITS RELATED CAD MATH DATA, AS WELL AS COMMUNICATION OF ANY CONTENT TO OTHERS, WITHOUT EXPRESS AUTHORIZATION, IS PROHIBITED.

		DATE
DR	SURESHKUMAR R	24JN22
APVD1	THOMAS B	24JN22
APVD2	THOMAS B	24JN22
APVD3		
APVD4		
APVD5		

SUBSTANCES OF CONCERN AND RECYCLED CONTENT PER APTIV 10949001

MATERIAL
SEE CHART

DRAWING NAME
SEAL CBL 1W CAVITY PLUG

DRAWING NUMBER
13887353

SIZE	SCALE	FRAME NO	SHEET NO	STG	REV	N/P
A1	20:1	1 OF 1	1 OF 1	R	02	--

SL. NO.	TITLE		PART-NO.	PART-REV	WEIGHT GR	VOLUME CM³	MATERIAL	COLOR	SIM.TO RAL	MATERIAL SPEC.
1	CAVITY PLUG	3.6 ±0.1	13887353	01	0.073	0.065	SILICONE 60 SHORE	BLUE	5005	M5778000
		CAVITY DIAMETER Ø	CAVITY PLUG							

CONTROLLED DOCUMENTS ARE ONLY AVAILABLE ON THE SERVER

User: rzgc7z Date: 14-Oct-22 Time: 10:00:28
Sysnm: 10142022.06129.252pass.cub