ASSEMBLY PART NUMBER CHART

MVL NUMBER	MVL REV	DELPHI NUMBER	DELPHI REV	KEY OPTION	COLOR	CLIP SLOT TYPE	HOUSING MVL	HOUSING DELPHI	1	2	3	4	5	6	7	8	9	10	11	12	13	14	15	16	OPEN CIRCUITS	MATES WITH ASSEMBLY (REFERENCE ONLY) MVL	DELPHI	MVL	DELPHI
54241600	C	13625160	01	A	Black	1	54241658	33503616																	16	54241630	13625159	54241630N	33500349
54241601	C	13612756	01	B	Grey	1	54241659	33503617																	16	54241631	13612755	54241631N	33500350
54241602	C	13625158	01	C	Brown	1	54241660	33503618																	16	54241632	13625155	54241632N	33500351
54241603	C	13615882	01	D	Green	1	54241661	33503619																	16	54241633	13615883	54241633N	33500352
54241604	C	33500141	01	A	Black	2	54241662	33503620																	16	54241630	13625159	54241630N	33500349
54241605	C	33500142	01	B	Grey	2	54241663	33503621																	16	54241631	13612755	54241631N	33500350
54241606	C	33500143	01	C	Brown	2	54241664	33503622																	16	54241632	13625155	54241632N	33500351
54241607	C	33500144	01	D	Green	2	54241665	33503623																	16	54241633	13615883	54241633N	33500352
54241608	C	33500145	01	A	Black	1	54241650	33503608								X									15	54241634	33500161	54241634N	33500353
54241609	C	33500146	01	B	Grey	1	54241651	33503609								X									15	54241635	33500162	54241635N	33500354
54241610	C	33500147	01	A	Black	2	54241654	33503612								X									15	54241634	33500161	54241634N	33500353
54241611	C	33500148	01	B	Grey	2	54241655	33503613								X									15	54241635	33500162	54241635N	33500354
54241612	C	33500149	01	A	Black	1	54241650	33503608								X	X								14	54241636	13640994	54241636N	33500355
54241613	C	33500150	01	B	Grey	1	54241651	33503609								X	X								14	54241637	33500163	54241637N	33500356
54241614	C	33500151	01	A	Black	2	54241654	33503612								X	X								14	54241636	13640994	54241636N	33500355
54241615	C	33500152	01	B	Grey	2	54241655	33503613								X	X								14	54241637	33500163	54241637N	33500356
54241616	C	33500153	01	A	Black	1	54241650	33503608	X							X	X								13	54241638	33500164	54241638N	33500357
54241617	C	33500154	01	B	Grey	1	54241651	33503609	X							X	X								13	54241639	33500165	54241639N	33500358
54241618	C	33500155	01	A	Black	2	54241654	33503612	X							X	X								13	54241638	33500164	54241638N	33500357
54241619	C	33500156	01	B	Grey	2	54241655	33503613	X							X	X								13	54241639	33500165	54241639N	33500358
54241620	C	33500157	01	A	Black	1	54241650	33503608	X							X	X							X	12	54241640	33500166	54241640N	33500359
54241621	C	33500158	01	B	Grey	1	54241651	33503609	X							X	X							X	12	54241641	33500167	54241641N	33500360
54241622	C	33500159	01	A	Black	2	54241654	33503612	X							X	X							X	12	54241640	33500166	54241640N	33500359
54241623	C	33500160	01	B	Grey	2	54241655	33503613	X							X	X							X	12	54241641	33500167	54241641N	33500360
54241624	F	33510857	01							X							X							X	13	54241642	33510839	54241642N	33510890
54241625	F	33510858	01							X				X	X						X			X	11	54241643	33510840	54241643N	33510849
54241626	F	33510859	01																					X	15	54241644	33510841	54241644N	33510850
54241627	G	33514110	01													X					X	X	X	X	11				
54241628	G	33514111	01									X	X	X									X	X	11				
55241606	G	33514112	01						X	X	X	X	X	X		X					X		X	X	6				
55241607	G	33514113	01																				X	X	14				
55241608	G	33514114	01																		X	X	X	X	12				
55241609	H	33514115	01	A	Black	2	54241654	33503612							X	X					X	X	X	X	10				
55241610	H	33514116	01						X	X	X	X	X	X	X	X					X		X	X	5				
55241611	H	33514117	01									X	X	X	X								X	X	10				
55241612	H	33514118	01												X						X	X	X	X	11				
55241613	H	33514119	01										X	X	X								X	X	11				
55241614	H	33514120	01							X						X	X						X		12				
F845100	A	33514121	01																		X			X	14				
F896100	A	33514122	01									X	X	X							X		X	X	10				
MVL	REV	33400043	01													X					X				14				
		33400044	01						X							X	X	X					X		11				
		33400091	01	A	Black	2	54241654	33503612	X	X	X	X	X	X	X	X	X	X	X	X	X	X	X	X	0				
		33400092	01	B	Grey	2	54241655	33503613	X	X	X	X	X	X	X	X	X	X	X	X	X	X	X	X	0				
		33400093	01	A	Black	1	54241650	33503608	X	X	X	X	X	X	X	X	X	X	X	X	X	X	X	X	0				
		33400094	01	B	Grey	1	54241651	33503609	X	X	X	X	X	X	X	X	X	X	X	X	X	X	X	X	0				
		DELPHI	REV	KEY	COLOR	CLIP	MVL	DELPHI	1	2	3	4	5	6	7	8	9	10	11	12	13	14	15	16	OPEN CRTS	MVL	DELPHI	MVL	DELPHI

RECOMMENDED APPLICABLE COMPONENTS

MVL	DELPHI	ITEM DESCRIPTION	PLATING MATERIAL	GRIP SIZE
54001626	13630404	APEX 150 TERMINAL	TIN	16,18
54002001	13624759	APEX 150 TERMINAL	TIN	20,22
54001628	13795935	APEX 150 TERMINAL	GOLD	16,18
54002003	13851003	APEX 150 TERMINAL	GOLD	20,22
54241629	13613164	APEX 150 UNIVERSAL SEAL PLUG	PA66	
54200010	13768145	DOUBLE X-MAS TREE CLIP WITH FORWARD STOP FOR CLIP SLOT TYPE 1	PA66	

COMMON PART NUMBER CHART ONE EACH INCLUDED IN ASSEMBLY

ITEM	PART NUMBERS MVL	DELPHI	DESCRIPTION	MATERIAL
2	54241684	33503740	TPA	PBT GF30
3	54241685	33504640	TCI	PBT GF30
4	54241689	33504642	END SEAL	SILICONE

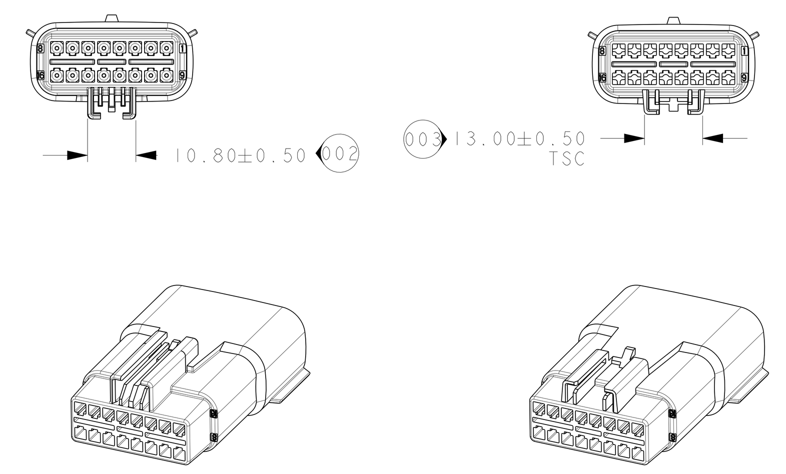

CLIP SLOT TYPE-1 (FOR CHRYSLER)

CLIP SLOT TYPE-2 (FOR FORD)

ACTUAL SIZE VIEWS

CLIP SLOT OPTIONS

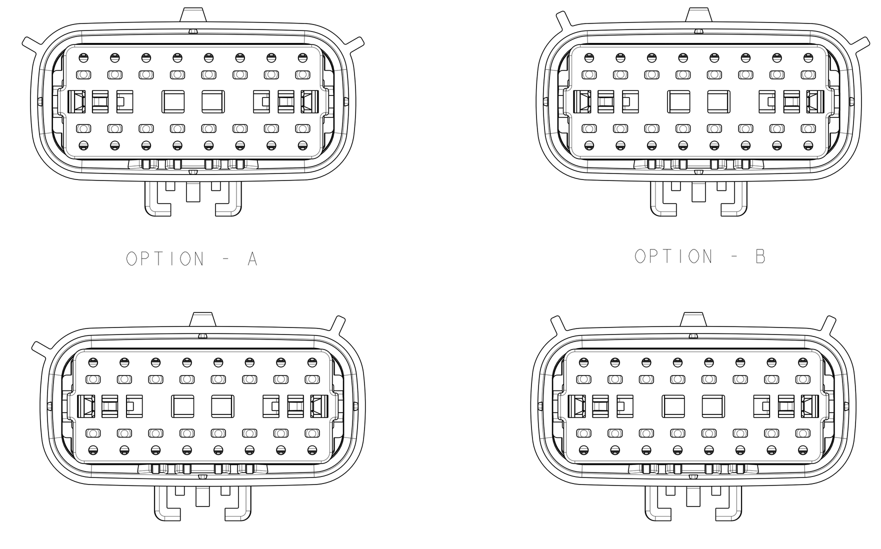

OPTION - A

OPTION - B

OPTION - C

OPTION - D

POLARIZATION OPTIONS

SHOWN WITH CLIP SLOT TYPE-1

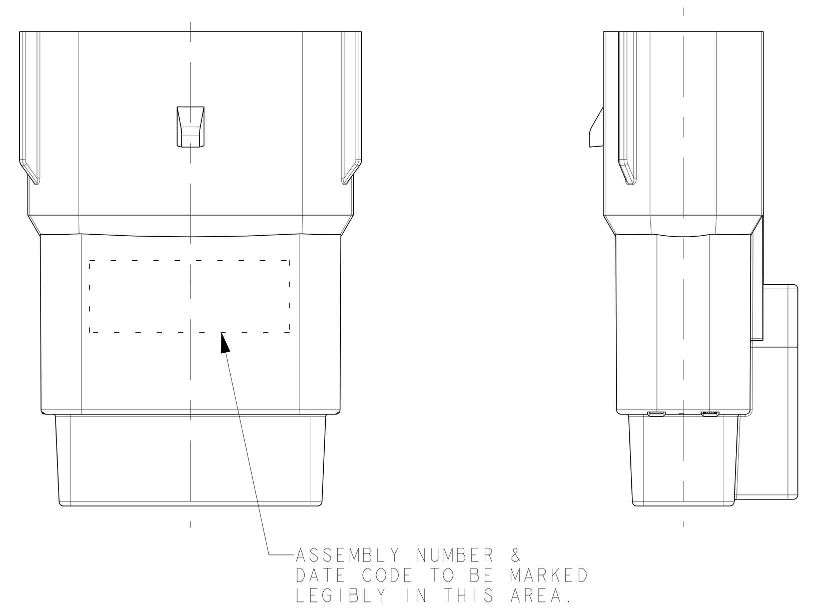

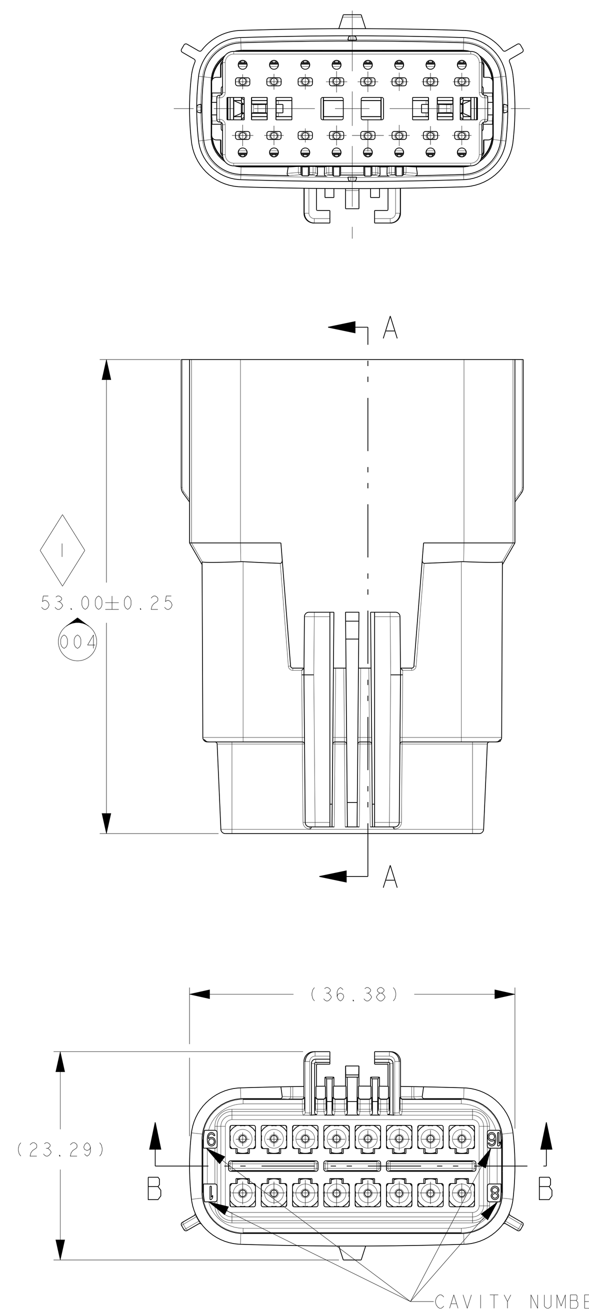

CLIP SLOT TYPE-1 SHOWN

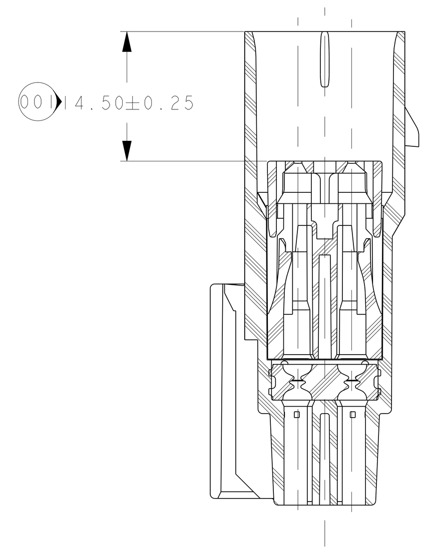

SECTION A-A

TPA IN PRE-ASSEMBLY POSITION

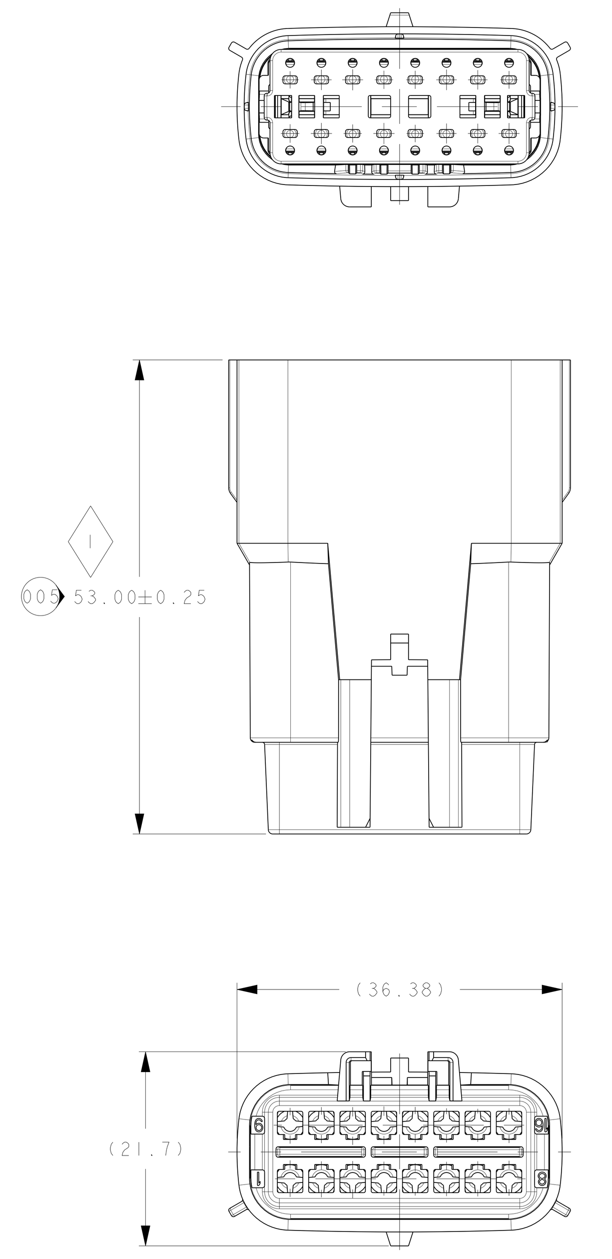

CLIP SLOT TYPE 2 SHOWN

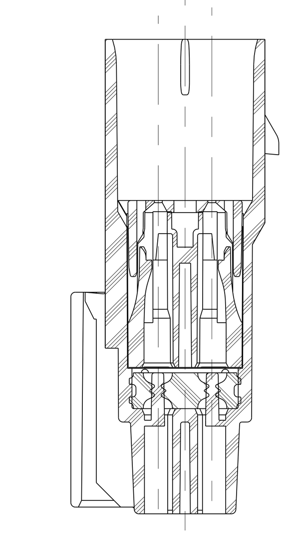

SECTION A-A

TPA IN FINAL-ASSEMBLY POSITION

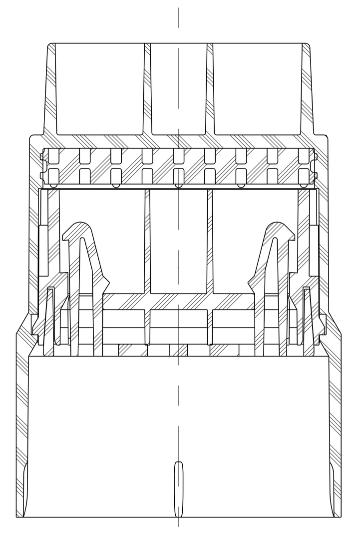

SECTION B-B

TPA IN FINAL-ASSEMBLY POSITION

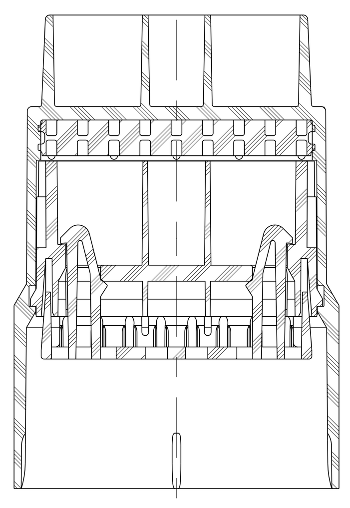

SECTION B-B

TPA IN PRE-ASSEMBLY POSITION

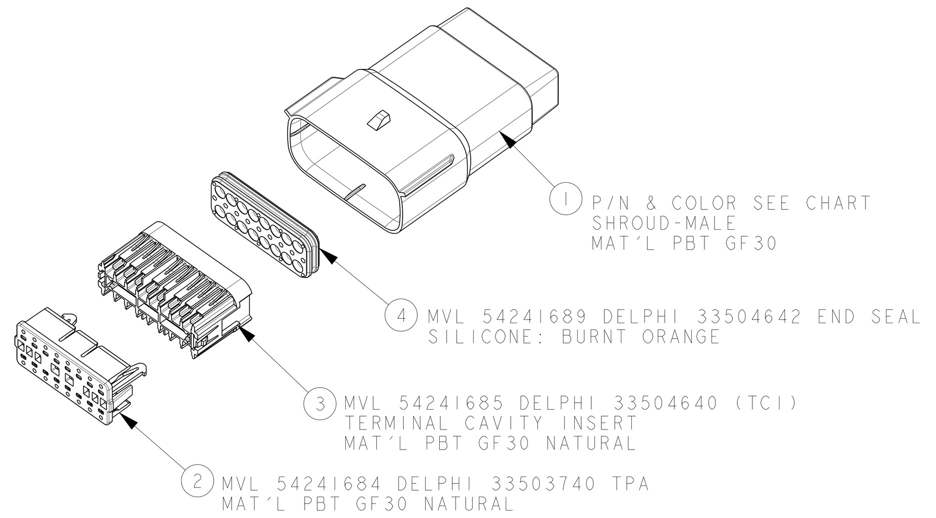

NOTE: ONE EACH REQUIRED

2 TPA MVL 54241684 DELPHI 33503740
3 TCI MVL 54241685 DELPHI 33504640
4 END SEAL MVL 54241689 DELPHI 33504642

ACTUAL SIZE EXPLODED VIEWS

NOTES:

1) MAXIMUM TEMPERATURE CLASS:
   CLASS 3 (-40°C TO 125°C)

2) TEST METHOD PER:
   SAE/USCAR-2 REV-4
   SAE/USCAR-20 REV-2

3) CONNECTOR MAY BE USED WITH THE FOLLOWING RANGE OF WIRE SIZES/TYPES:
   - SIZE:22 GAGE- 16 GAGE- 1.50mm MIN O.D. TO 2.41mm MAX O.D.
   - TYPE: TXL (MIL123-A /MS-8288)
   - CONTACT MVL ENGINEERING REGARDING USE OF OTHER WIRE TYPES AND/OR SIZES

4) CONNECTOR MAY BE USED WITH THE FOLLOWING TERMINALS:
   - MVL APEX150 WITH WIRE SIZES DEFINED IN APPLICABLE COMPONENTS CHART
   - CONTACT MVL ENGINEERING REGARDING USE OF COMPATIBLE NON MVL TERMINALS

5) ANNUAL QUALITY REQUIREMENTS:
   IT IS PERMISSIBLE TO PERFORM CONTINUOUS CONFORMANCE PER MVL SPECIFICATION #AQA-001 INSTEAD OF ANNUAL LAYOUT AND ANNUAL PV REQUIREMENTS OF QS-9000 SECTION 2 AND SAE/USCAR-2 REV-4

6) ◇1 QUALITY ASSURANCE REQUIREMENTS SPC DATA REQUIRED

ECN-NO.	ZONE	CHANGE DESCRIPTION
14-05261	ALL	ECO 425300 - REVISED AND REDRAWN ON DELPHI TITLE BLOCK SEE REV K FOR PREVIOUS CHANGES. DELPHI PART NUMBERS ADDED FOR MVL PARTS WITH REV LEVELS, PART NUMBER CHART UPDATED VIEWS RE-ALIGNED & MVL WAS FCI

PRODUCT SPEC.: APEX 150 | PACKAGING SPEC.: - | APPLICATION SPEC.: -

COPYRIGHT DELPHI CORPORATION AND/OR ITS AFFILIATES. ALL RIGHTS RESERVED. REVISED THIS DRAWING IS THE PROPERTY OF DELPHI CORPORATION AND CONTAINS DELPHI CONFIDENTIAL INFORMATION. THE REPRODUCTION, DISTRIBUTION AND UTILIZATION OF THIS DOCUMENT OR ITS RELATED CAD MATH DATA, AS WELL AS COMMUNICATION OF ANY CONTENT TO OTHERS, WITHOUT EXPRESS AUTHORIZATION, IS PROHIBITED.

TOLERANCES: SEE DRAWING
COUNTERPART Nr.: K36002
DO NOT MEASURE DRAWING
MATERIAL: SEE EXPLODED VIEWS
COLOUR: SEE EXPLODED VIEWS
SURFACE FINISH: -
TOOL NO. A-131 | ECO Loc. Code AN

DELPHI
DELPHI PACKARD ELECTRICAL/ELECTRONIC ARCHITECTURE NOVI, MI

3RD ANGLE | DIMENSION IN MILLIMETERS
CAD SYSTEM: pro / eng. | DWG SIZE: A0 | APPROVAL LEVEL: - | SHEET 1 of 1 | SCALE 2:1

	DATE	NAME
CREATED BY	2003-12-20	RAMA K
MODIFIED BY	2014/04/23	Sucha SIAN
CHECKED BY	2014/05/02	Matt MAJOR
APPROVED BY	2014/05/03	Jeff CAMPBELL

TITLE: 16 WAY MALE ASSEMBLY
PROJECT: APEX 150 16-WAY K36
ESR NO. AM-030204 | CAT. NO. -
FILE NAME: K36001
DOCUMENT UNDER PDS CONTROL NO MODIFICATION ALLOWED OUTSIDE

DRAWING NUMBER: K36001 | REV. L
STATE: SERIAL RELEASED
PART NUMBER: See Table | REV. -

EUR C04 112 F29 PDS