SYMBOL DEFINITION		
A DIMENSION WITHOUT AN INSPECTION REPORT SYMBOL (__) DOES NOT REQUIRE INSPECTION. IT MAY BE CONTROLLED ON THE INDIVIDUAL COMPONENT DRAWING.	TOTAL NO OF INSPECTIONS REQUIRED	14
	LAST NO. USED	11

MISSING SYMBOLS
NO MISSING SYMBOL NUMBER

DWG STATUS					ZONE	REVISION HISTORY	AUTH	DR	APVD 1	APVD 2
DATE	STG	REV	N/P	CHG						
23JL02	R	A2	-	-		CLEARED REVISION COLUMN: MAT'L SPEC WAS R0071794	22B191	TLD	TLD	MC
07MR03	R	A3	-	-		ADDED PREFERRED CONSTRUCTION	237897	JVM	JVM	PD
15OC10	R	A4	-	-		(13.27) WAS 13.27	412173	MAB	JAA	RAP

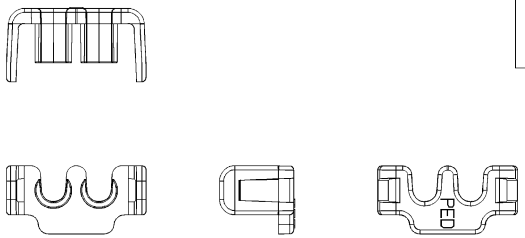

PREFERRED CONSTRUCTION
SCALE 5:1

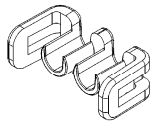

SCALE 5:1

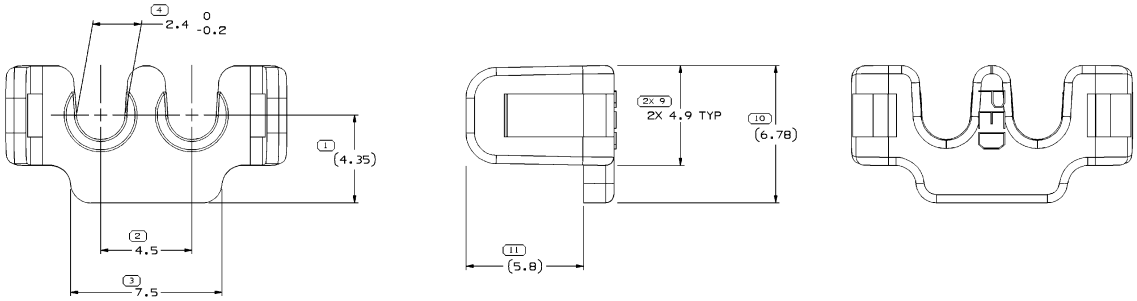

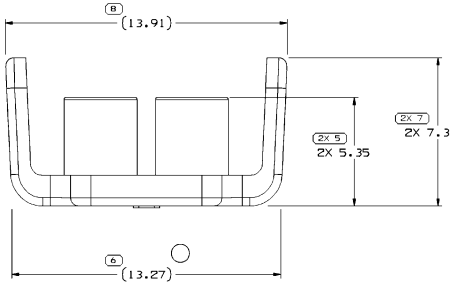

NOTES

1. UNLESS OTHERWISE SPECIFIED AND/OR INDICATED:

   DIMENSIONS ARE TO FACE OF VIEW SHOWN AND AUTOMATICALLY ROUNDED BY COMPUTER FOR INSPECTION (SEE MATH MODEL FOR PRECISE DIMENSIONS). FOR ALL OTHER DIMENSIONS NOT SHOWN BUT REQUIRED FOR TOOL BUILD, SEE MATH MODEL FOR PRECISE TOOL PATH DATA.

   LOCKING FEATURES ARE IDENTICAL

2. MATERIAL RECYCLING CODE PER ISO 11469. (1.3)X(0.1) RAISED CHARACTERS AS SHOWN TO BE LOCATED ON ANY EXTERIOR SURFACE. OPTIONAL CONTRUCTION TO BE NO MATERIAL RECYCLING CODE.

3. REFERENCE MATING COMPONENTS OR EQUIVALENT:

   CONNECTOR 12191730

4. (1.3)X(0.1) DELPHI CORPORATE BRAND TO BE LOCATED ON ANY EXTERIOR SURFACE, PREFERABLY VISIBLE AT FINAL ASSEMBLY. OPTIONAL CONSTRUCTION FOR EXISTING TOOLING MAY BE "PED" OR NO LOGO.

5. THIS PRODUCT IS NOT CATEGORIZED AS AN APPEARANCE ITEM, MINOR IMPERFECTIONS INCLUDING, BUT NOT LIMITED TO, FLOW MARKS, COLOR BLEMISHES, GATE VESTIGE, AND SOFT FLASH THAT DO NOT AFFECT THE FIT, FORM, OR FUNCTION OF THE PART ARE PERMISSIBLE PER DPNP-4.7-CS-01.

(5) PROCESS SENSITIVE DIMENSION

DIMENSIONS ENCLOSED IN ( ) INDICATE REFERENCE DIMENSIONS AND NO TOLERANCE LIMITS ARE ESTABLISHED

DIMENSIONAL RANGE (MM)									CHART A
FROM TO	> 0 20	> 20 30	> 30 70	> 70 100	>100 150	>150 200	>200 250	>250 300	>300 400
TOLERANCE UNLESS OTHERWISE SPECIFIED									
	±0.15	±0.2	±0.3	±0.4	±0.5	±0.6	±0.8	±1	±1.2
ANGULAR TOLERANCE ±2°									

DWG TYPE	
PART DRAWING	
STYLE	
VOLUME (CU^3) 0.143	DISTR CODE

UNLESS OTHERWISE SPECIFIED

THIS DOCUMENT IS IN ACCORDANCE WITH ASME Y14.5M-1994 AS AMENDED BY ASME Y14.5.1M-1994 DIMENSIONING AND TOLERANCING ADDENDUM - 1995. ALL GEOMETRIC TOLERANCES AND RELATED DATUMS APPLY RFS. RULE #1(PERFECT FORM AT MMC) DOES NOT APPLY WHEN RELATIONSHIP BETWEEN FEATURES IS ESTABLISHED BY ORIENTATION OR LOCATION TOLERANCES. SEPARATE POSITION CALLOUTS MAY BE SHARED SEPARATELY, REGARDLESS OF DATUM REFERENCE.
ALL DIMENSIONS ARE IN MILLIMETERS

REFERENCE

THIRD ANGLE PROJECTION

DO NOT SCALE

USE MATH DATA

NX

DELPHI

DELPHI PACKARD ELECTRICAL/ELECTRONIC ARCHITECTURE
WARREN, OH

		DATE
DR		
APVD1	RAY NEMTZ	11SE95
APVD2	RAY NEMTZ	11SE95
APVD3	RAY NEMTZ	22MR96
APVD4		
APVD5		

SUBSTANCES OF CONCERN AND RECYCLED CONTENT PER DELPHI (0949001)

MATERIAL
POLYAMIDE COMPOUND GRAY

DRAWING NAME
LOCK SECONDARY TPA GT

DRAWING NUMBER
12191731

SIZE	SCALE	FRAME NO	SHEET NO	STG	REV	N/P
A1	10:1	1 OF 1	1 OF 1	R	A4	-

User: CUSER
Model: 12191731-0-0-0-2-001 Date: 15-OCT-15 Time: 08:51
Message: