MOUNTING HOLE INFORMATION

SCALE 3:1

- REFERENCE DIMENSIONS #56, #59, #62, #65, #68, #81 AND #82 ARE VARIABLE DUE TO ADJUSTABLE BOLT LOCATION
- THICKNESS SHOULD BE CONTROLLED BY THE MATING PANEL SUPPLIER
- INSPECTION SYMBOLS SHOWN IN THIS VIEWS ARE FOR REFERENCE ONLY

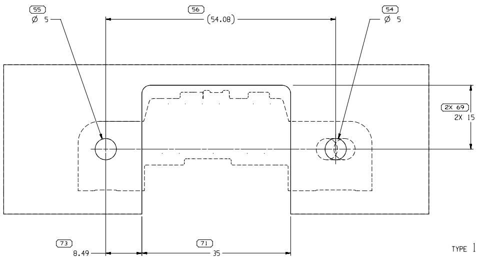
55
Ø 5
56
(54.08)
54
Ø 5
2X 69
2X 15
73
8.49
71
35

LOCATION A

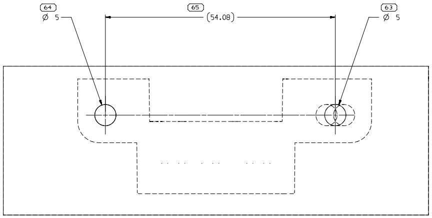
64
Ø 5
65
(54.08)
63
Ø 5

LOCATION B

TYPE 101

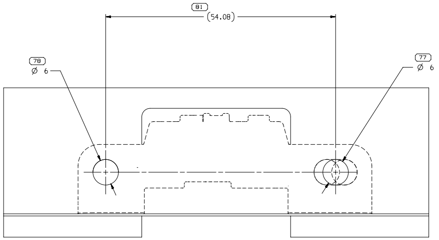
81
(54.08)
78
Ø 6
77
Ø 6

LOCATION A

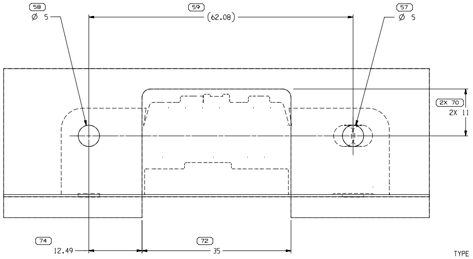
58
Ø 5
59
(62.08)
57
Ø 5
2X 70
2X 11
74
12.49
72
35

LOCATION A

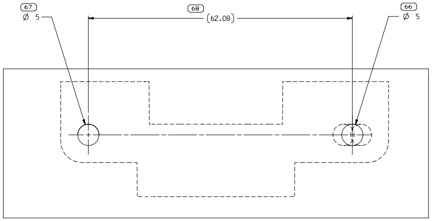
67
Ø 5
68
(62.08)
66
Ø 5

LOCATION B

TYPE 104

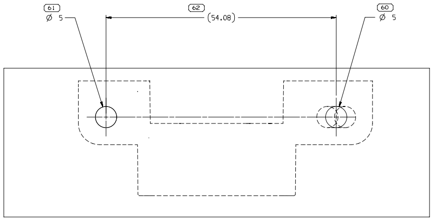
61
Ø 5
62
(54.08)
60
Ø 5

TYPE 103

DRAWING NUMBER
121914

SIZE	SCALE	FRAME NO	SHEET
A1x8	4:1	4 OF 4	1 OF

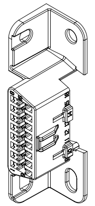

SCALE 2:1

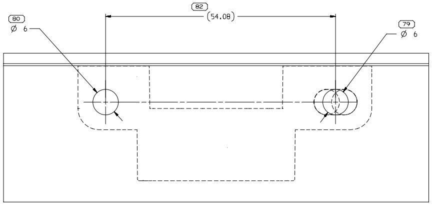
80
Ø 6
82
(54.08)
79
Ø 6

LOCATION B

TYPE 105

○

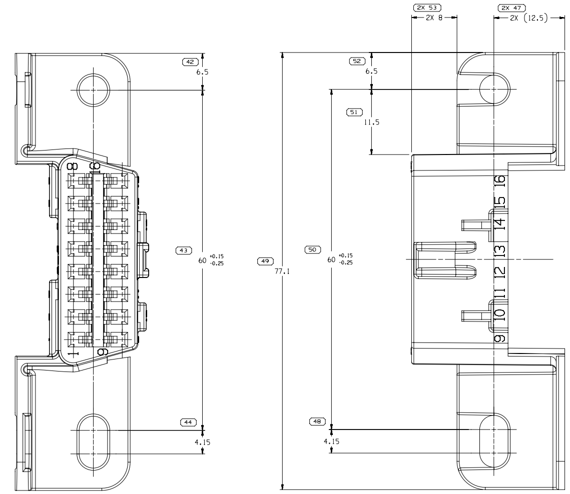
42
6.5
43
60 +0.15 -0.25
44
4.15
8
16
1
9
2X 53
2X 8
2X 47
2X (12.5)
52
6.5
51
11.5
49
77.1
50
60 +0.15 -0.25
48
4.15
16
15
14
13
12
11
10
9

TYPE 104
SAME AS TYPE 101
EXCEPT AS SHOWN

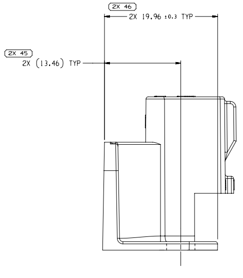
2X 46
2X 19.96 ±0.3 TYP
2X 45
2X (13.46) TYP

53			
NO STG		REV	N/P
1	R	06	-

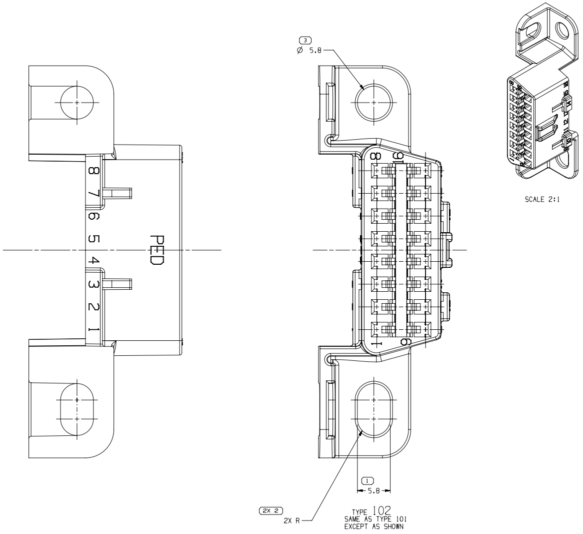
8
7
6
5
4
3
2
1
PED
3
Ø 5.8
8
9
1
16
1
5.8
2X 2
2X R
SCALE 2:1

TYPE 102
SAME AS TYPE 101
EXCEPT AS SHOWN

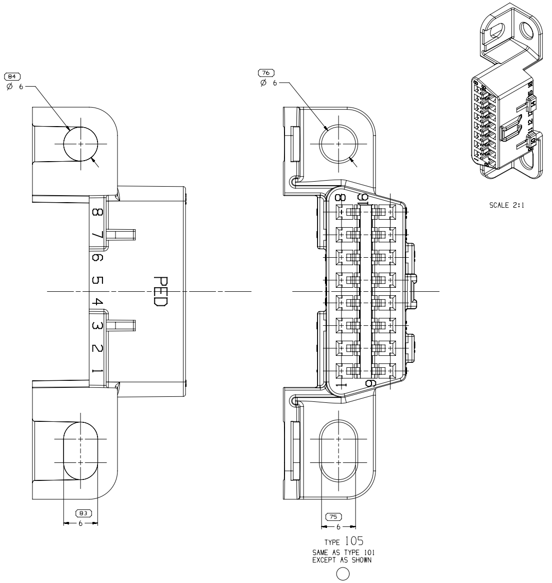
84
Ø 6
8
7
6
5
4
3
2
1
PED
83
6
76
Ø 6
8
9
1
16
75
6
SCALE 2:1

TYPE 105
SAME AS TYPE 101
EXCEPT AS SHOWN

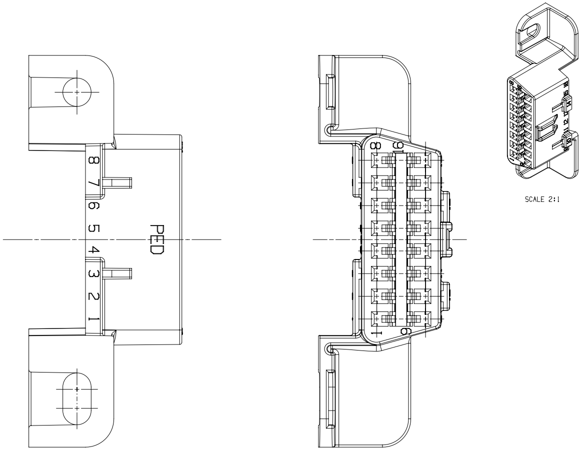
8
7
6
5
4
3
2
1
PED
8
9
1
16
SCALE 2:1

TYPE 103
SAME AS TYPE 101
EXCEPT AS SHOWN
(WITH ONLY TWO MOUNTING HOLES)

DRAWING NUMBER						
12191453						
SIZE	SCALE	FRAME NO	SHEET NO	STG	REV	N/P
A1x8	4:1	3 OF 4	1 OF 1	R	06	-

~~35434694~~	01	-	105	POLYAMIDE COMPOUND BLACK	6.300
~~33248081~~	01	-	104	POLYAMIDE COMPOUND BLACK	7.597
13647317	01	AB	103	POLYAMIDE COMPOUND BLACK	6.548
~~12191454~~	A2	-	102	POLYAMIDE COMPOUND GRAY	6.407
12110250	D3	-	101	POLYAMIDE COMPOUND BLACK	6.457
PART NO	REV	N/P	TYPE	MATERIAL SPECIFICATION AND COLOR	VOLUME CM³

SYMBOL DEFINITION

A DIMENSION WITHOUT AN INSPECTION REPORT SYMBOL ⬭ DOES NOT REQUIRE INSPECTION. IT MAY BE CONTROLLED ON THE INDIVIDUAL COMPONENT DRAWING.

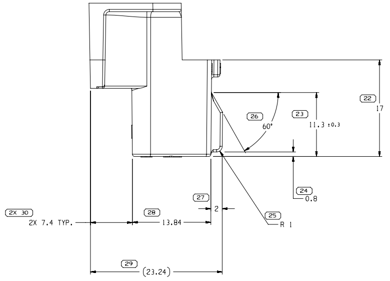

22
17
23
11.3 ±0.3
26
60°
24
0.8
27
2
25
R 1
2X 30
2X 7.4 TYP.
28
13.84
29
(23.24)

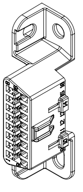
SCALE 2:1

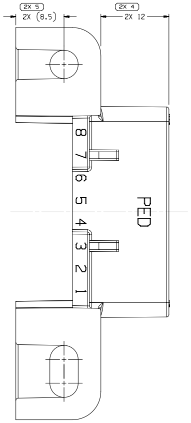

2X 5
2X (8.5)
2X 4
2X 12
8
7
6
5
4
3
2
1
PED

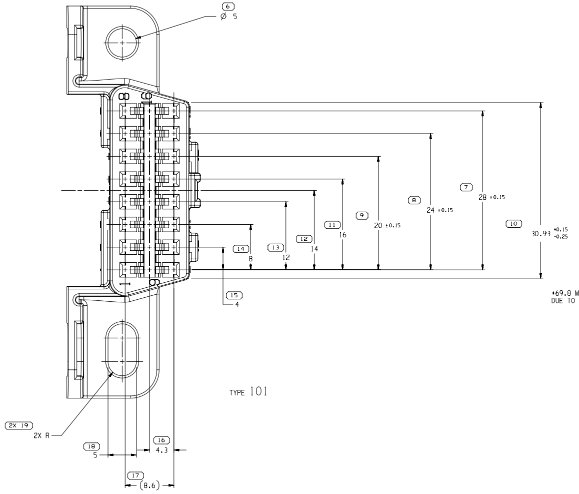

6
Ø 5
8
16
1
9
7
28 ±0.15
8
24 ±0.15
9
20 ±0.15
11
16
12
14
13
12
14
8
10
30.93 +0.15 -0.25
15
4
2X 19
2X R
18
5
16
4.3
17
(8.6)

TYPE 101

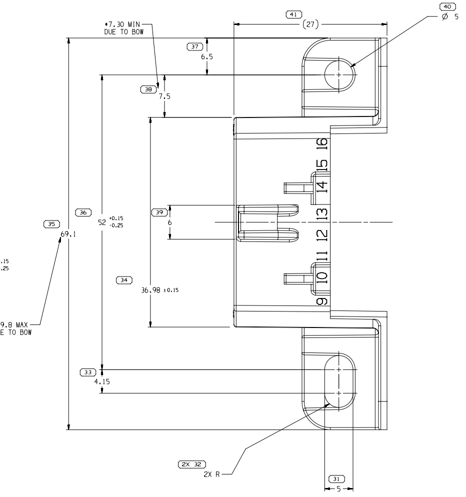

41
(27)
40
Ø 5
*7.30 MIN
DUE TO BOW
37
6.5
38
7.5
36
52 +0.15 -0.25
35
69.1
39
6
34
36.98 ±0.15
16
15
14
13
12
11
10
9
33
4.15
*69.8 MAX
DUE TO BOW
2X 32
2X R
31
5

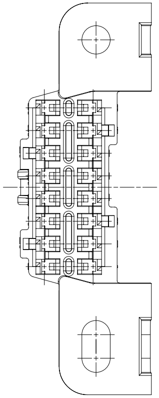

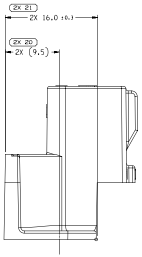

2X 21
2X 16.0 ±0.3
2X 20
2X (9.5)

NOTES

1. UNLESS OTHERWISE SPECIFIED AND/OR INDICATED:

   DIMENSIONS ARE TO FACE OF VIEW SHOWN AND AUTOMATICALLY ROUNDED BY COMPUTER FOR INSPECTION (SEE MATH MODEL FOR PRECISE DIMENSIONS). FOR ALL OTHER DIMENSIONS NOT SHOWN BUT REQUIRED FOR TOOL BUILD, SEE MATH MODEL FOR PRECISE TOOL PATH DATA.

2. MATERIAL RECYCLING CODE PER ISO 11469. (2.3)X(0.1) RAISED CHARACTERS AS SHOWN TO BE LOCATED ON ANY EXTERIOR SURFACE. OPTIONAL CONSTRUCTION TO BE NO MATERIAL RECYCLING CODE.

3. FOR APPLICATION DATA SEE THE INDIVIDUAL APPLICATION DRAWINGS.

4. HYDROSCOPIC MATERIALS ABSORB AND RELEASE MOISTURE DEPENDING ON THE RELATIVE HUMIDITY OF THE ENVIROMENT. HYGROSCOPIC POLUMERS SUCH AS PA6 AND PA66 (NYLONS IN GENERAL). REQUIRE PROPER STORAGE AND PACKAGING, EVERY EFFORT IS MADE BY APTIV TO CORRECTLY PACKAGE THIS PRODUCT AT INITIAL SHIPMENT FROM THE APTIV PRODUCING PLANT. FAILURE TO PROTECT COMPONENTS COMPOSED OF HYGROSCOPIC MATERIALS DURING SUBSEQUENT HANDLING, SOTAGE AND PACKAGING, PARTICULARLY IN HIGH HUMIDITY ENVIROMENTS CAN RESULT IN DIMENSIONAL CHANGE FOR WHICH APTIV WILL NO BE LIABLE.

5. CORPORATE BRAND TO BE APPLIED TO PRODUCT DESIGN PER THE LATEST REVISION OF ESD S1085201.

6. WHEN PARTS ARE SHIPPED THEY MUST BE PACKED IN PLASTIC BAGS OR SHIPPING CONTAINERS MUST BE LINED WITH PLASTIC LINERS. BAGS OR LINERS MUST BE SEALED TO AVOID ENTRY OF FOREIGN MATTER.

7. HOLE DIAMETER MAY NEED MODIFIED FOR SERVICE APPLICATION.

-
-
-
12110250
-
REPLACED BY

DRAWING NUMBER
12191453

SIZE	SCALE	FRAME NO	SHEET NO	STG	REV	N/P
A1x8	4:1	2 OF 4	1 OF 1	R	06	-

TOTAL NO OF INSPECTIONS REQUIRED	98
LAST NO. USED	84

MISSING SYMBOLS
NO MISSING SYMBOL NUMBER

DWG STATUS					ZONE	REVISION HISTORY	AUTH	DR	APVD 1	APVD 2
DATE	STG	REV	N/P	CHG						
03JN02		01	-	-		ALL PARTS - REDRAWN TO PD AND UPDATED MAT'L. SPECS.	225823	TAI	TAI	AM
18SE06	R	02	-	-		12191454 - OBSOLETE	284670	MM	MM	BG
04MY07	R	03	-	-		13647317 - RELEASED	401310	JTV	AUG	JGS
26AU09	R	04	-	-		ALL ACTIVE PARTS - ADDED A MOISTURE ABSORPTION NOTE	408752	HRS	GEM	GEM
05MY15	R	05	-	-		33248081 - RELEASED ALL AVAILABLE PARTS - ADDED MOUNTING HOLE INFORMATION	429443	KYT	KYT	JSK
01FE20	R	06	-	-		35434694 - RELEASED	550901	JGO	GLG	JCA

A LINE DRAWN THROUGH A PART NUMBER INDICATES THAT PHYSICAL PARTS ARE NOT AVAILABLE FOR ORDERING.

PART NUMBERS THAT DO NOT HAVE A LINE PRESENT INDICATE THAT PHYSICAL PARTS ARE AVAILABLE FOR ORDERING.

CONTACT APTIV SALES TO ASSURE AVAILABILITY OF PARTS.

DWG TYPE: PART DRAWING

STYLE:

VOLUME (CM³): SEE CHART

DISTR CODE: D

UNLESS OTHERWISE SPECIFIED

THIS DOCUMENT IS IN ACCORDANCE WITH ASME Y14.5M-1994 AS AMENDED BY THE GM GLOBAL DIMENSIONING AND TOLERANCING ADDENDUM - 1997. ALL GEOMETRIC TOLERANCES AND RELATED DATUMS APPLY RFS. RULE #1(PERFECT FORM AT MMC) DOES NOT APPLY WHEN RELATIONSHIP BETWEEN FEATURES IS ESTABLISHED BY ORIENTATION OR LOCATION TOLERANCES. SEPARATE POSITION CALLOUTS MAY BE GAGED SEPARATELY, REGARDLESS OF DATUM REFERENCE.

ALL DIMENSIONS ARE IN MILLIMETERS

REFERENCE:

(1) PROCESS SENSITIVE DIMENSION

DIMENSIONS ENCLOSED IN ( ) INDICATE REFERENCE DIMENSIONS AND NO TOLERANCE LIMITS ARE ESTABLISHED

DIMENSIONAL RANGE (MM)								CHART E1	
FROM TO	> 0 20	> 20 30	> 30 70	> 70 100	>100 150	>150 200	>200 250	>250 300	>300 400
TOLERANCE UNLESS OTHERWISE SPECIFIED									
	±0.15	±0.2	±0.3	±0.4	±0.5	±0.6	±0.8	±1	±1.2
ANGULAR TOLERANCE ±2°									

THIRD ANGLE PROJECTION

DO NOT SCALE

USE MATH DATA

CAD NX

•APTIV•

CONNECTION SYSTEMS

WARREN, OH

COPYRIGHT 2002 APTIV. ALL RIGHTS RESERVED.

THIS DRAWING IS THE PROPERTY OF APTIV AND CONTAINS APTIV CONFIDENTIAL INFORMATION. THE REPRODUCTION, DISTRIBUTION AND UTILIZATION OF THIS DOCUMENT OR ITS RELATED CAD MATH DATA, AS WELL AS COMMUNICATION OF ANY CONTENT TO OTHERS, WITHOUT EXPRESS AUTHORIZATION, IS PROHIBITED.

		DATE
DR		
APVD1	TROY ILER	03JN02
APVD2	TROY ILER	03JN02
APVD3	ANGEL MONTENEGRO	03JN02
APVD4		
APVD5		

SUBSTANCES OF CONCERN AND RECYCLED CONTENT PER APTIV 10949001

MATERIAL: SEE CHART

DRAWING NAME: TAXI CONN F M/P 150

DRAWING NUMBER: 12191453

SIZE	SCALE	FRAME NO	SHEET NO	STG	REV	N/P
A1x8	4:1	1 OF 4	1 OF 1	R	06	-

12191453

User: wz027c
Part: 12191453-CUS01-S01/06 Date: 02-Mar-20 Time: 14:57:51
x_JU17h,03022020,14:56,258pass,nor,wz027c