ASSOCIATED PARTS			
N°	DESIGNATION	CODING	APTIV PN
1	PLUG RCS 890 SW GEN-2	CODE 1	35464221

DWG STATUS					ZONE	REVISION HISTORY	AUTH	DR	APVD 1	APVD 2
DATE	STG	REV	N/P	CHG						
03DE25	R	01	-	-	-	INITIAL RELEASE		M.GOP	S.LAC	T.LEC

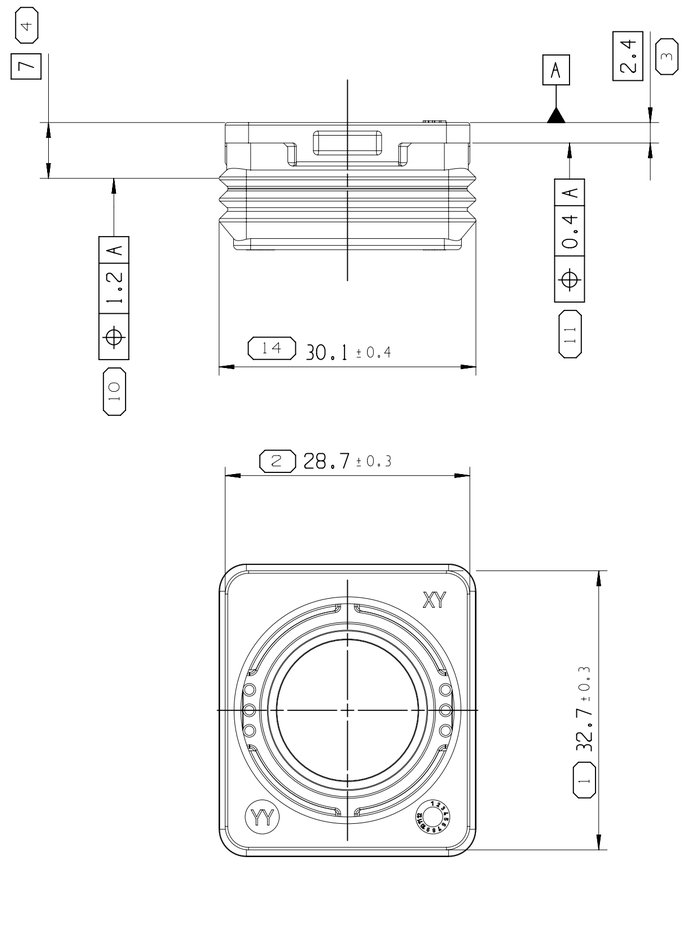

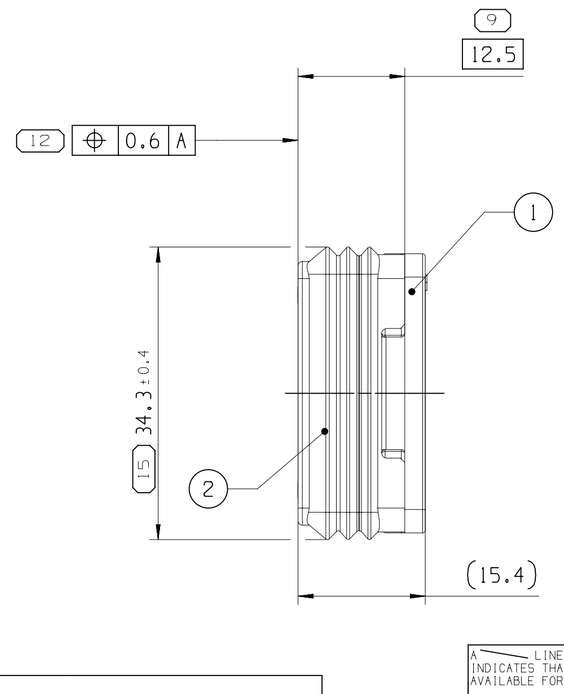

3D VIEW
SCALE 1:1

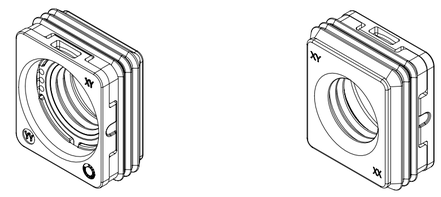

WIRE SECTION								
N°	DESCRIPTION	PART N°	50MM²	70MM² FOR SILICON CABLE	70MM² FOR XLPO CABLE	MATERIAL	WEIGHT	SECTION VIEW
	REAR SEALING ASSEMBLY	APTIV PN	35850205	35464265	35823293	-	-	SCALE 1:1
		REVISION	01	02	02			
1	SPACER	APTIV PN	35464227			PA6 GF30	6.6g	
		COLOR	BLACK					
		SIZE(D1) ±0.3	25					
2	SWS	APTIV PN	35588042	35464229	35823294	SILICON	5.5g	
		COLOR	GREY	GREEN	RED-BROWN			
		SIZE(D2) ±0.5	14.3	16.55	16.15			

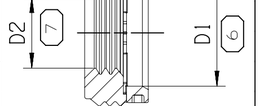

DIM TO CHECK
COTES A VERIFIER
( ) DIM FOR HELP
COTES POUR INFO
THEORETIC DIM
COTES THEORIQUES

A LINE DRAWN THROUGH A PART NUMBER INDICATES THAT PHYSICAL PARTS ARE NOT AVAILABLE FOR ORDERING.

PART NUMBERS THAT DO NOT HAVE A LINE PRESENT INDICATE THAT PHYSICAL PARTS ARE AVAILABLE FOR ORDERING.

CONTACT APTIV SALES TO ASSURE AVAILABILITY OF PARTS.

LA LIGNE TRACÉE SUR LA RÉFÉRENCE PIÈCE INDIQUE QUE LA PIÈCE N'EST PAS DISPONIBLE À LA COMMANDE.

LES RÉFÉRENCES PIÈCES QUI NE SONT PAS BARRÉES INDIQUENT QUE CELLES-CI SONT DISPONIBLES PHYSIQUEMENT POUR ÊTRE COMMANDÉES.

CONTACTER LE SERVICE COMMERCIAL DE APTIV POUR S'ASSURER DE LA DISPONIBILITÉ DES PIÈCES

SHARP CORNER TOLERANCE

DIMENSIONAL RANGE (MM)									CHART E1
FROM	> 0	> 20	> 30	> 70	>100	>150	>200	>250	>300
TO	20	30	70	100	150	200	250	300	400
TOLERANCE UNLESS OTHERWISE SPECIFIED									
	±0.15	±0.2	±0.3	±0.4	±0.5	±0.6	±0.8	±1	±1.2
ANGULAR TOLERANCE ±2°									

DWG TYP
CUSTOMER PART DRAWING

WEIGHT (GR)
SEE TABLE

VOLUME (CM³)
--

ROUTING

DISTR CODE

UNLESS OTHERWISE SPECIFIED

GENERAL TOLERANCES ACCORDING TO: SEE CHART

GD&T ACCORDING TO: ISO 1101

REFERENCE
PE463761-CUS01

FIRST ANGLE PROJECTION

DO NOT SCALE

USE MATH DATA

CAD NX

•APTIV•

CONNECTION SYSTEMS
Chennai, India

COPYRIGHT 2025 APTIV. ALL RIGHTS RESERVED.

THIS DRAWING IS THE PROPERTY OF APTIV AND CONTAINS APTIV CONFIDENTIAL INFORMATION. THE REPRODUCTION, DISTRIBUTION AND UTILIZATION OF THIS DOCUMENT OR ITS RELATED CAD MATH DATA, AS WELL AS COMMUNICATION OF ANY CONTENT TO OTHERS, WITHOUT EXPRESS AUTHORIZATION, IS PROHIBITED.

CE PLAN EST LE PROPRIETE DE APTIV ET CONTIENT DES INFORMATIONS APTIV CONFIDENTIELLES. LA REPRODUCTION, LA DISTRIBUTION ET L'UTILISATION DE CE DOCUMENT OU DE SES DONNÉES MATHÉMATIQUES CAO, AINSI QUE LA COMMUNICATION DE TOUT CONTENU À AUTRUI, SANS AUTORISATION EXPRESSE EST INTERDITE.

		DATE
DR	M.GOPIKRISHNAN	03DE25
APVD1	S.LACOTE	03DE25
APVD2	T.LECOMTE	03DE25
APVD3		
APVD4		
APVD5		

SUBSTANCES OF CONCERN AND RECYCLED CONTENT PER APTIV 10949001
MATIERES PROSCRITES ET CONTENU RECYCLABLE SELON APTIV 10949001

MATERIAL
SEE TABLE

DRAWING NAME
REAR SEALING DEVICE
2W RCS 890 SW GEN-2

DRAWING NUMBER
36056716

SIZE	SCALE	FRAME NO	SHEET NO	STG	REV	N/P
A2	2:1	1 OF 1	1 OF 1	R	01	-

User: 62b412 Date: 10-Dec-25 Time: 15:17:57
Part: 36056716-CUS02-S01/01
62b412,12102025,09:46,12lpass,cus