SYMBOL DEFINITION		
A DIMENSION WITHOUT AN INSPECTION REPORT SYMBOL ( ) DOES NOT REQUIRE INSPECTION. IT MAY BE CONTROLLED ON THE INDIVIDUAL COMPONENT DRAWING.	TOTAL NO OF INSPECTIONS REQUIRED	5
	LAST NO. USED	5

MISSING SYMBOLS
NO MISSING SYMBOL NUMBER

DWG STATUS					ZONE	REVISION HISTORY	AUTH	DR	APVD	APVD
DATE	STA	REC	N/P	CHG					1	2
12AP16	R	01	-	-		ALL PARTS - RELEASED PART DRAWING	432655	MRB	MRB	DDJ
31JL17	R	02	-	-		ALL PARTS - REVISED GRAPHICS	437365	MKS	MKS	DDJ
25OC17	R	03	-	-		ALL PARTS - UPDATED PART AVAILABILITY	438172	KV	KV	DDJ

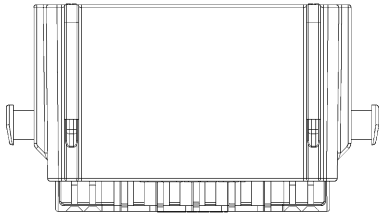

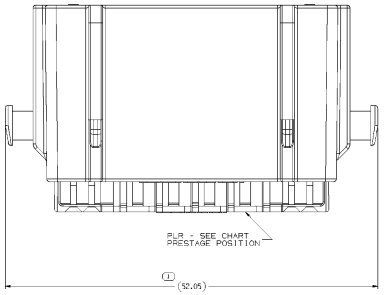

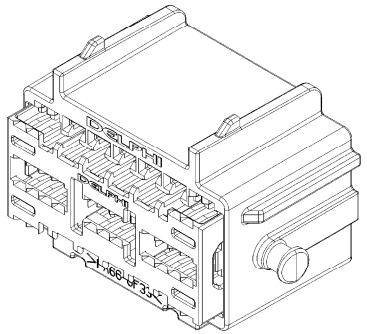

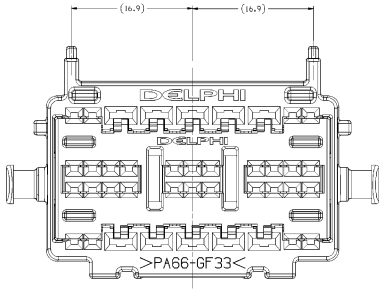

TYPE 102
SAME AS TYPE 101
EXCEPT AS SHOWN

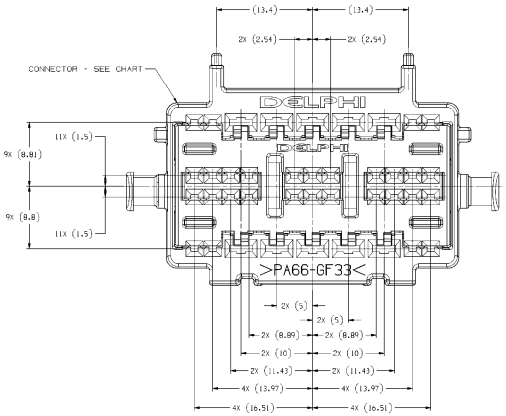

TYPE 101

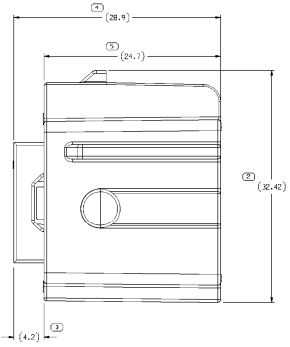

NOTES

1. UNLESS OTHERWISE SPECIFIED AND/OR INDICATED:

   DIMENSIONS ARE TO FACE OF VIEW SHOWN AND AUTOMATICALLY ROUNDED BY COMPUTER FOR INSPECTION (SEE MATH MODEL FOR PRECISE DIMENSIONS). FOR ALL OTHER DIMENSIONS NOT SHOWN BUT REQUIRED FOR TOOL BUILD, SEE MATH MODEL FOR PRECISE TOOL PATH DATA.

2. FOR APPLICATION DATA SEE THE INDIVIDUAL APPLICATION DRAWINGS.

3. THIS PRODUCT IS NOT CATEGORIZED AS AN APPEARANCE ITEM, MINOR IMPERFECTIONS INCLUDING, BUT NOT LIMITED TO, FLOW MARKS, COLOR BLEMISHES, GATE VESTIGE, AND SOFT FLASH THAT DO NOT AFFECT THE FIT, FORM, OR FUNCTION OF THE PART ARE PERMISSIBLE PER DPUP-4.7-CS-01.

PART NO	REV	N/P	TYPE	CONNECTOR	PLR
33333640	C2	AA	102	33333651 - GRAY DARK	33170859
33333648	C2	AA	101	33333650 - BLACK	33170859

PROCESS INSPECTION STANDARD: DIMENSIONS ENG-2003 AT 2.1 INSPECT. DIMENSIONS ENG-2003 AT 2.1 AS "CLEARANCE" UNITS ARE DETAILS/MM.

STANDARD DIMENSIONAL TOLERANCE (MM)											
FROM	> 0	> 3	> 6	> 30	> 120	> 315	> 1000	> 2000	> 3150	> 4500	> 100
TO	3	6	30	120	315	1000	2000	3150	4500	100	400
TOLERANCE	±0.05	±0.1	±0.2	±0.3	±0.5	±1	±2	±3	±4	±0.5	±1%

CHART F1
DO NOT SCALE
USE MATH DATA
THIRD ANGLE PROJECTION
NX

DWG TYPE: PART DRAWING
STYLE:
VOLUME (CM³):
SURFACE (CM²):

UNLESS OTHERWISE SPECIFIED
THIS DOCUMENT IS TO BE DISCLOSED WITH CARE (10.1A) FROM DELPHI TO THE RECEIVING PARTY. DELPHI RETAINS OWNERSHIP OF THIS DOCUMENT. DELPHI RETAINS OWNERSHIP OF FEATURES NOT BY DELPHI REPRESENTED PROPRIETARY BY SUCH REPRESENTED.

ALL DIMENSIONS ARE IN MILLIMETERS

REFERENCE: 13978936

DELPHI
DELPHI PROPULSION ELECTRONICS/ELECTRONIC ARCHITECTURE
COPYRIGHT 2016 DELPHI AUTOMOTIVE LLP (DELPHI). ALL RIGHTS RESERVED.
THIS DRAWING IS THE PROPRIETARY PROPERTY OF DELPHI. REPRODUCTION AND DISPLAYING DETAILS CONFIDENTIAL INFORMATION CONTAINED HEREIN IS PROHIBITED WITHOUT THE PRIOR WRITTEN CONSENT OF DELPHI. DELPHI RETAINS OWNERSHIP OF ALL RIGHTS, TITLE AND INTEREST IN THIS DRAWING AND ANY INFORMATION CONTAINED HEREIN. NO RIGHTS OR OWNERSHIP OF ANY DRAWING OR DESIGN, WITHOUT EXPRESS AUTHORIZATION, IS PROHIBITED.

		DATE
DR		
APVD1	ALAIN PREVOST	12APR16
APVD2	ALAIN PREVOST	12APR16
APVD3	DAVID J. DECKANT	12APR16
APVD4		
APVD5		

SUBSTANCES OF CONCERN AND RECYCLED CONTENT PER DELPHI (EMAIDEL)

MATERIALS: SEE CHART

DRAWING NAME: TAXI ASM CONN 40 F OCS

DRAWING NUMBER: 33344741

SIZE	SCALE	FRAME NO	SHEET NO	DPD	REV	NPP
A0	5:1	1 OF 1	1 OF 1	R	03	-