SYMBOL DEFINITION		
A DIMENSION WITHOUT AN INSPECTION REPORT SYMBOL DOES NOT REQUIRE INSPECTION. IT MAY BE CONTROLLED ON THE INDIVIDUAL COMPONENT DRAWING.	TOTAL NO OF INSPECTIONS REQUIRED	69
	LAST NO. USED	48

MISSING SYMBOLS
25 37-38

DWG STATUS					ZONE	REVISION HISTORY	AUTH	DR	APVD	APVD
DATE	SUB	REV	PVP	CHG					2	3
27APIT	R	01	-	-		INITIAL RELEASED	-	PRA	YS	SUI
10FEI9	R	01	AA	-		ADDED DIM#45,46,47,48	442856	YS	NZ	WSJM

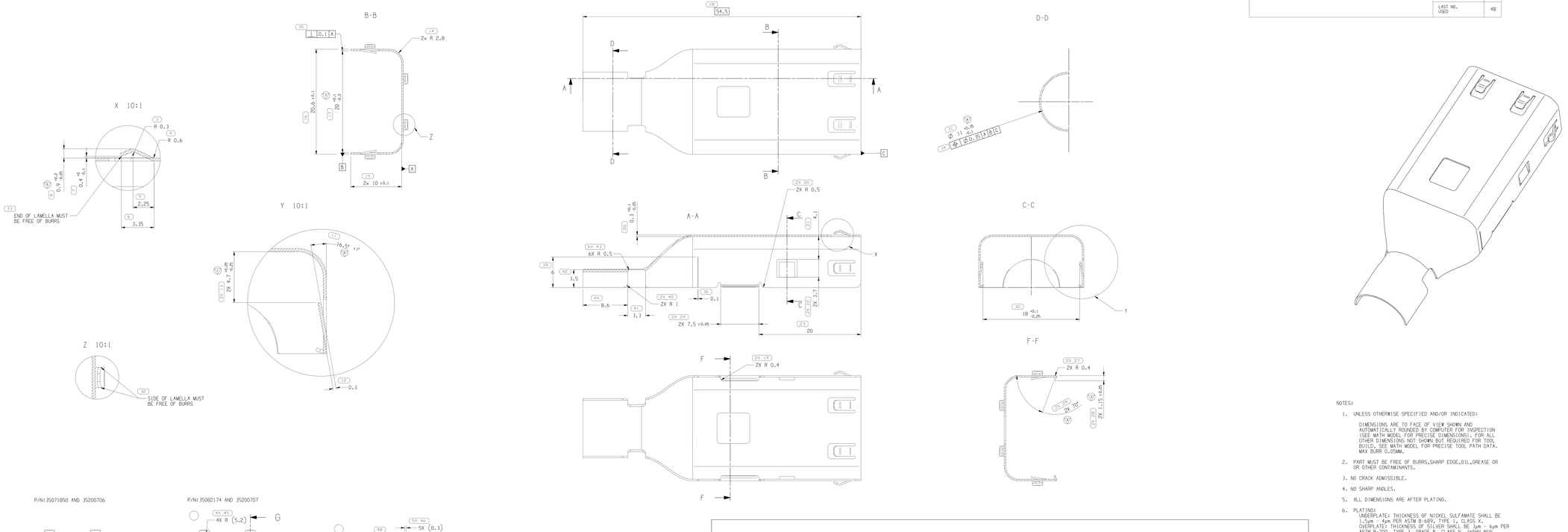

NOTES:

1. UNLESS OTHERWISE SPECIFIED AND/OR INDICATED:

   DIMENSIONS ARE TO FACE OF VIEW SHOWN AND AUTOMATICALLY ROUNDED BY COMPUTER FOR INSPECTION (SEE MATH MODEL FOR PRECISE DIMENSIONS). FOR ALL OTHER DIMENSIONS NOT SHOWN BUT REQUIRED FOR TOOL BUILD, SEE MATH MODEL FOR PRECISE TOOL PATH DATA. MAX BURR 0.05MM.

2. PART MUST BE FREE OF BURRS,SHARP EDGE,OIL,GREASE OR OR OTHER CONTAMINANTS.

3. NO CRACK ADMISSIBLE.

4. NO SHARP ANGLES.

5. ALL DIMENSIONS ARE AFTER PLATING.

6. PLATING:
   UNDERPLATE: THICKNESS OF NICKEL SULFAMATE SHALL BE 1.5μm - 4μm PER ASTM B-689, TYPE I, CLASS X.
   OVERPLATE: THICKNESS OF SILVER SHALL BE 3μm - 6μm PER ASTM B-700, TYPE J, GRADE B, CLASS N, 165HV MIN.
   ANTI TARNISH TREATMENT PER DELPHI MS815 SPECIFICATION REQUIREMENTS. ANY COATING BRAND OTHER THAN EVABRITE MUST BE APPROVED BY DELPHI.

7. THIS PART USED IN ASSEMBLY XXXXXXXX TYPICALLY.

P/N:35071850 AND 35200706

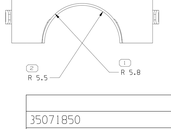

P/N:35082174 AND 35200707

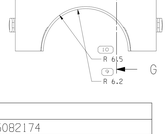

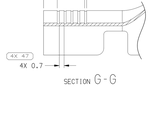

VW	
35071850	35082174
PART NO. EMC SHEILD FOR 2*4 sq.mm	PART NO. EMC SHEILD FOR 2*6 sq.mm
NORMAL	
35200706	35200707
PART NO. EMC SHEILD FOR 2*4 sq.mm	PART NO. EMC SHEILD FOR 2*6 sq.mm

KEY PRODUCT CHARACTERISTICS			
SAFETY/COMPLIANCE	FIT/FUNCTION	TOTAL ON DRAWING	7
S/C CHECKPOINTS	F/F CHECKPOINTS	LAST NO. USED	7

NO & TYPE	DESCRIPTION	RATIONALE	PTS	ZONE

REEL AND CARRIER STRIP VIEW

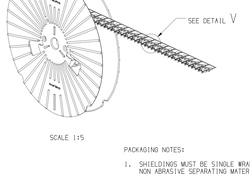

SCALE 1:5

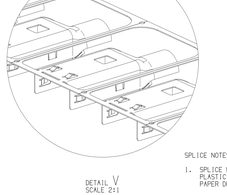

DETAIL V
SCALE 2:1

PACKAGING NOTES:

1. SHIELDINGS MUST BE SINGLE WRAPPED ON PLASTIC REEL WITH NON ABRASIVE SEPARATING MATERIAL.

2. PARTS SHOULD BE PLACED IN CLEAN PLASTIC TUBS OR PANS LINED WITH POLYETHYLENE BAGS DURING PROCESSING. BAGS SHALL BE CLOSED DURING STORAGE AND SHIPMENT. NOTE: WAX LINED BOXES MAY BE SUBSTITUTED FOR POLYETHYLENE BAGS. REELS TO BE PROTECTED FROM SHIPPING DAMAGE.

3. APPROXIMATE QUANTITY OF SHIELDINGS PER REEL TO BE DETERMINED. HOWEVER, IN NO CASE SHALL WEIGHT OF FULL REEL EXCEED 30 LBS.

SPLICE NOTES:

1. SPLICE MUST USE PAPER OR PLASTIC SPLICE.
   PLASTIC DPES PART NUMBER 1501002
   PAPER DPES PART NUMBER 1501810

2. PAPER INTERLEAF AS REQUIRED.

3. FOR REELS WITH 3,500 OR LESS SHIELDINGS, THERE SHALL BE NO LESS THAN 500 SHIELDINGS BETWEEN SPLICES. FOR REELS WITH OVER 3,500 SHIELDINGS, THERE SHALL BE NO LESS THAN 1,000 SHIELDINGS BETWEEN SPLICES. ALL REELS CONTAINING SPLICES SHALL BE IDENTIFIED WITH A LABEL (PART NUMBER XXXXXXXX) ON THE SAME SIDE AS THE SHIELDING IDENTIFICATION LABEL.

DRAWING NUMBER 35082179
SIZE A1x3 | SCALE 2:1 | FRAME NO 2 OF 2 | SHEET NO 1 OF 1 | REV R 01 AA

LINE DRAWN THROUGH A PART NUMBER INDICATES THAT PHYSICAL PARTS ARE NOT AVAILABLE FOR ORDERING.
PART NUMBERS THAT DO NOT HAVE A LINE PRESENT INDICATE PHYSICAL PARTS ARE AVAILABLE FOR ORDERING.
CONTACT APITH SALES TO ASSURE AVAILABILITY OF PARTS.

NEW TYPE: PART DRAWING
STYLE:
VOLUME CM³: 0.520
SYSTEM UNIT: D
UNLESS OTHERWISE SPECIFIED
THIS DOCUMENT IS IN ACCORDANCE WITH ASME Y14.5M-1994 UNLESS OTHERWISE SPECIFIED. ALL DIMENSIONS INCLUDE TOLERANCING MAXIMUM COATS. SEPARATE PLATING OF FEATURES MAY BE GRADS SEPARATELY REGARDLESS OF DATUM REFERENCES.
ALL DIMENSIONS ARE IN MILLIMETERS

THIS DRAWING IS THE PROPERTY OF DELPHI CORPORATION AND IS TO BE KEPT IN CONFIDENCE. NO PART OF THE REPRODUCTION, DISTRIBUTION AND UTILIZATION THEREOF MAY BE MADE WITHOUT WRITTEN AUTHORIZATION AS WELL AS COMMUNICATION OF ANY CONTENT TO OTHERS, WITHOUT EXPRESS AUTHORIZATION, IS PROHIBITED.
COPYRIGHT 2017 DELPHI CORPORATION AND/OR ITS AFFILIATES. ALL RIGHTS RESERVED.

DR	PRABHU	27APIT
APVD1	SHEN YU	27APIT
APVD2	HUANG SUIBIN	27APIT
APVD3		
APVD4		
APVD5		

SUBSTANCES OF CONCERN AND RECYCLED CONTENT PER APTIV (DRAWING)
MATERIAL: M5680, T 0.3MM
DRAWING NAME: TAXI TERM SHIELD
DRAWING NUMBER: 35082179
SIZE A1x3 | SCALE 2:1 | FRAME NO 1 OF 2 | SHEET NO 1 OF 1 | REV R 01 AA

(17) PROCESS SENSITIVE DIMENSION
DIMENSIONS ENCLOSED IN ( ) INDICATE REFERENCE DIMENSIONS AND NO TOLERANCE REQUIRED UNLESS OTHERWISE SPECIFIED

DIMENSIONAL RANGE (MM)	CHAMF D
0 TO 3	0.3
3 TO 6	0.5
>6	1.0

TOLERANCE UNLESS OTHERWISE SPECIFIED
ANGLES ±0.5°
ANGLES TO REFERENCE 0°

THIRD ANGLE PROJECTION
DO NOT SCALE
USE MATH DATA
NX

DELPHI
DELPHI PACKARD ELECTRICAL/ELECTRONIC ARCHITECTURE
Shanwei, PRCPR

35082179

2	27APIT	B
1	27APIT	A

35082179

DATE: 2018/10/24 | TIME: 08:08:14
FILE: 35082179.DWG | SIZE: A1x3 | SCALE: 2:1 | FORMAT: DELPHI