SYMBOL DEFINITION		
A DIMENSION WITHOUT AN INSPECTION REPORT SYMBOL (C) DOES NOT REQUIRE INSPECTION. IT MAY BE CONTROLLED ON THE INDIVIDUAL COMPONENT DRAWING.	TOTAL NO OF INSPECTIONS REQUIRED	16
	LAST NO. USED	16

MISSING SYMBOLS

NO MISSING SYMBOL NUMBER

DWG STATUS DATE	STS	REC	N/P	CHG	ZONE	REVISION HISTORY	AUTH	DR	APVD 1	APVD 2
18SE01	R	31	-	-	-	ALL PARTS - REDRAWN TO PD, ADDED OPTIONAL CONSTRUCTION NOTES & REVISED MAT'L SPEC	2L1K58	EDV	EDV	RC
11DE01	R	32	-	-	-	ALL PARTS - REMOVED 2.7 DIM & REVISED INSPECTION SYMBOL NUMBER	2L8438	EDV	EDV	RC
17JA03	R	33	-	-	-	ALL PARTS - UPDATED PDM ATTRIBUTES	2J4915	AAR	AAR	RC
23JA03	R	34	-	-	-	ALL PARTS - ADDED NOTE 5	2J5937	EDV	EDV	RC
07AU09	R	35	-	-	-	ALL PARTS - ADDED APLICATION DATA NOTE	4J8E97	CBB	JLA	BMC
19DC16	R	36	-	-	-	12172246,47 - UPDATED PART AVAILABILITY ALL PARTS - CORRECTED VOLUME	4J4632	KYT	ACV	ACV

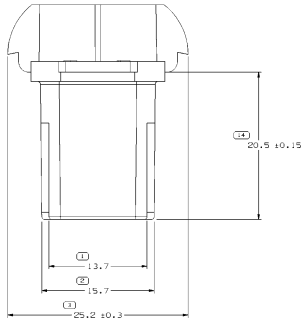

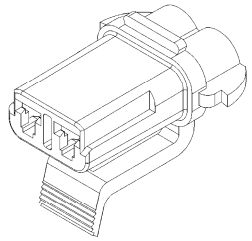

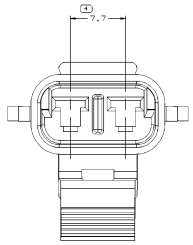

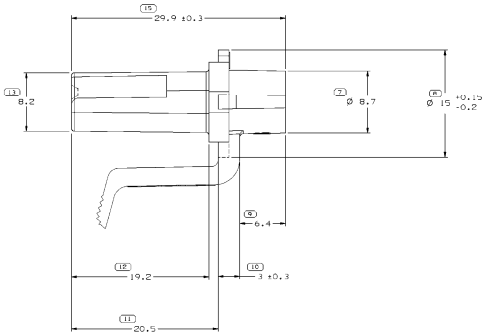

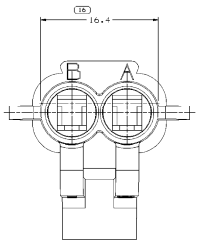

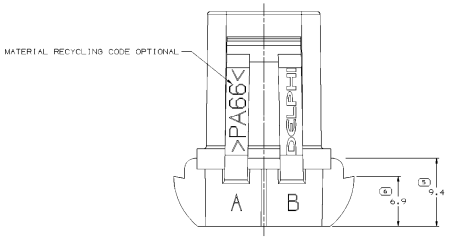

NOTES

1. UNLESS OTHERWISE SPECIFIED AND/OR INDICATED:

   DIMENSIONS ARE TO FACE OF VIEW SHOWN AND AUTOMATICALLY ROUNDED BY COMPUTER FOR INSPECTION (SEE MATH MODEL FOR PRECISE DIMENSIONS). FOR ALL OTHER DIMENSIONS NOT SHOWN BUT REQUIRED FOR TOOL BUILD, SEE MATH MODEL FOR PRECISE TOOL PATH DATA.

2. MATERIAL RECYCLING CODE PER ISO 11469. (2.3)X(0.1) CHARACTERS AS SHOWN TO BE LOCATED ON ANY EXTERIOR SURFACE.

3. THIS PRODUCT IS NOT CATEGORIZED AS AN APPEARANCE ITEM. MINOR IMPERFECTIONS INCLUDING, BUT NOT LIMITED TO, FLOW MARKS, COLOR BLEMISHES, GATE VESTIGE, AND SOFT FLASH THAT DO NOT AFFECT THE FIT, FORM, OR FUNCTION OF THE PART ARE PERMISSIBLE PER DPNP-4.7-CS-01.

4. (2.3)X(0.1) DELPHI CORPORATE BRAND TO BE LOCATED ON ANY EXTERIOR SURFACE, PREFERABLY VISIBLE AT FINAL ASSEMBLY. OPTIONAL CONSTRUCTION FOR EXISTING TOOLING MAY BE "PED". OR NO LOGO.

5. CAVITY IDENTIFICATION LETTERS TO BE LOCATED ON BARRELS AND/OR RAIL.

6. FOR APPLICATION DATA SEE THE INDIVIDUAL APPLICATION DRAWINGS.

PART NO	REV	N/P	MATERIAL SPECIFICATION AND COLOR	VOLUME CM³
15300008	E11	-	POLYAMIDE COMPOUND BLACK	2.734
12172247	A10	-	POLYAMIDE COMPOUND RED	2.734
12172246	A10	-	POLYAMIDE COMPOUND NATURAL	2.734
12162693	A11		POLYAMIDE COMPOUND GRAY	2.734

(C15) PROCESS INSPECTION STANDARDS

DIMENSIONS ARE BASED ON A 23 INSPECTS SAMPLE SIZE AS PER "DELPHI" LIMITS ARE DEVELOPED.

REFERENCE

STANDARD TOL.	BASIC DIM.										
FRACT	0-6	>6-30	>30-120	>120-315	>315-1000	>1000-2000	>2000-3000	>3000-4000
IN	.25	.50	.75	1.00	1.25	1.50	1.75	2.00

THIRD ANGLE PROJECTION

DO NOT SCALE

USE MATH DATA

NX

DELPHI

DELPHI PACKARD ELECTRICAL/ELECTRONIC ARCHITECTURE

COPYRIGHT 2003 DELPHI TECHNOLOGIES, INC. ALL RIGHTS RESERVED.
THIS DRAWING IS THE PROPERTY OF DELPHI CORPORATION AND CONTAINS DETAILED CONFIDENTIAL INFORMATION. THIS DRAWING MUST NOT BE REPRODUCED IN WHOLE OR IN PART WITHOUT WRITTEN PERMISSION FROM DELPHI CORPORATION, NOR MUST IT BE DISCLOSED TO OTHERS, OR USED IN CONNECTION WITH ANY DESIGN TO OTHERS, WITHOUT EXPRESS AUTHORIZATION IN WRITING.

		DATE
DR	APVD1 E. VAZQUEZ	18SE01
	APVD2 E. VAZQUEZ	18SE01
	APVD3 H. CORZAS	18SE01
	APVD4	
	APVD5	

SUBSTANCES OF CONCERN AND RECYCLED CONTENT PER DELPHI (EMAIL01)

MATERIAL

SEE CHART

DRAWING NAME

TAXI CONN F M/P 280 SLD

DRAWING NUMBER						
12162700						
SIZE	SCALE	TRACE NO	SHEET NO	QTY	REV	NPP
A0	5:1	1 OF 1	1 OF 1	1	R	Db -