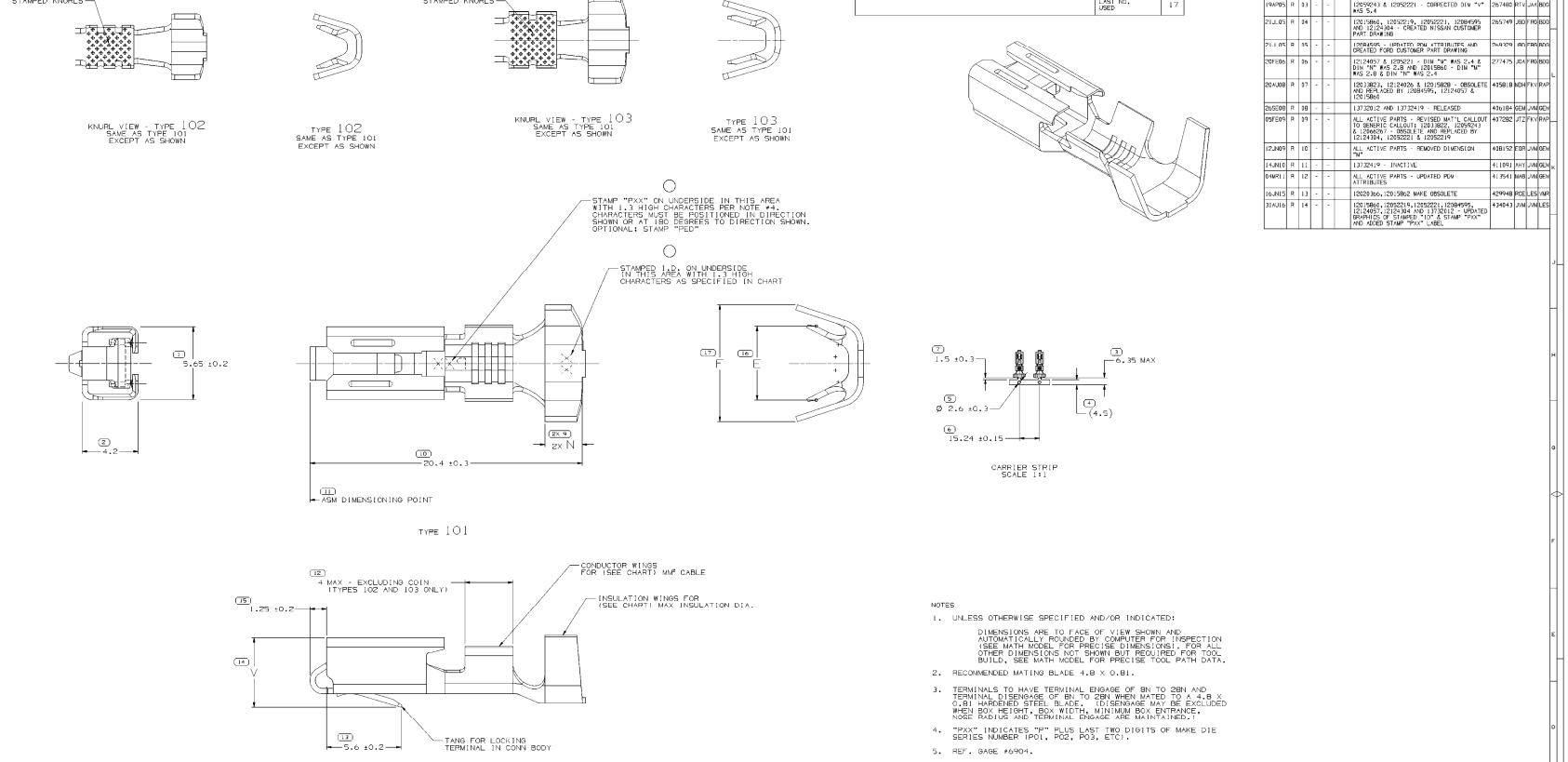
SYMBOL DEFINITION		
A DIMENSION WITHOUT AN INSPECTION REPORT SYMBOL (□) DOES NOT REQUIRE INSPECTION. IT MAY BE CONTROLLED ON THE INDIVIDUAL COMPONENT DRAWING.	TOTAL NO OF INSPECTIONS REQUIRED	17
	LAST NO. USED	17

MISSING SYMBOLS
B

DWG STATUS				ZONE	REVISION HISTORY	AUTH	DR	APVD/APVD
DATE	STS	REV	N/P	(DB)				1 | 2
6Q19D4	R	31	-	-	CLEARED REVISION COLUMN. ALL PARTS - REDRAWN TO PDI: 12052221 - 2.4 M/S 6.24	2508810	KDB	AMD/BDG
11APR5	R	32	-	-	ALL ACTIVE PARTS - ADDED GRAPHIC OF KNURL FOR TYPE (102 & 103)	2667140	MDH	JAM/BDH
19APR5	R	33	-	-	12059243 & 12052221 - CORRECTED DIM "A" M/S 5.4	2674810	MTV	JAM/BDG
21JL05	R	34	-	-	12015866, 12052219, 12052221, 12084595 AND 12124304 - CREATED NISSAN CUSTOMER PART DRAWING	2657491	JED	TRD/BDG
31JL05	R	35	-	-	12084595 - UPDATED PDM ATTRIBUTES AND CREATED FORD CUSTOMER PART DRAWING	2693276	JED	TRD/BDG
29SEP6	R	36	-	-	12124057 & 12052221 - DIM "M" WAS 2.4 & DIM "N" W/S 2.8 AND 12015866 - DIM "M" WAS 2.8 & DIM "N" W/S 2.4	2772475	JDA	PRO/BDG
20AU08	R	37	-	-	12013823, 12124026 & 12015828 - OBSOLETE AND REPLACED BY 12084595, 12124057 & 12015866	4358180	MDH	TKV/RAP
26SEP8	R	38	-	-	13732012 AND 13732419 - RELEASED	4361841	KEM	JAM/BDH
05FEB9	R	39	-	-	ALL ACTIVE PARTS - REVISED MAT'L CALLOUT TO GENERIC CALLOUT: 12013822, 12052243 & 12084571 - OBSOLETE AND REPLACED BY 12124304, 12052221 & 12052219	4372282	JTZ	TKV/RAP
12JN09	R	10	-	-	ALL ACTIVE PARTS - REMOVED DIMENSION "M"	4381152	EBR	JAM/BDH
14JN10	R	11	-	-	13732419 - INACTIVE	4118911	MHV	JAM/BDH
8MAR11	R	12	-	-	ALL ACTIVE PARTS - UPDATED PDM ATTRIBUTES	4135411	MAB	JAM/BDH
16JN15	R	13	-	-	12020366, 12015862 MAKE OBSOLETE	4299481	RDE	LES/ARP
31AU16	R	14	-	-	12015866, 12052219, 12052221, 12084595, 12124057, 12124304 AND 13732612 - UPDATED GRAPHICS OF STAMPED "10" & STAMP "PXX" AND ADDED STAMP "PXX" LABEL	4348413	JAM	JAM/LES



NOTES

1. UNLESS OTHERWISE SPECIFIED AND/OR INDICATED:

   DIMENSIONS ARE TO FACE OF VIEW SHOWN AND AUTOMATICALLY ROUNDED BY COMPUTER FOR INSPECTION (SEE MATH MODEL FOR PRECISE DIMENSIONS). FOR ALL OTHER DIMENSIONS NOT SHOWN BUT REQUIRED FOR TOOL BUILD, SEE MATH MODEL FOR PRECISE TOOL PATH DATA.

2. RECOMMENDED MATING BLADE 4.8 X 0.81.

3. TERMINALS TO HAVE TERMINAL ENGAGE OF 8N TO 28N AND TERMINAL DISENGAGE OF 8N TO 28N WHEN MATED TO A 4.8 X 0.81 HARDENED STEEL BLADE. (DISENGAGE MAY BE EXCLUDED WHEN BOX HEIGHT, BOX WIDTH, MINIMUM BOX ENTRANCE, NOSE RADIUS AND TERMINAL ENGAGE ARE MAINTAINED).

4. "PXX" INDICATES "P" PLUS LAST TWO DIGITS OF MAKE DIE SERIES NUMBER (P01, P02, P03, ETC).

5. REF. GAGE #6904.

6. DO NOT PROBE, TEST OR OTHERWISE CONTACT THE INTERIOR REGION (SPRING OR ANY MOVING PART) OF THIS TERMINAL. SEVERE DAMAGE CAN OCCUR, COMPROMISING THE PERFORMANCE OF THE ELECTRICAL INTERFACE.

7. ** INDICATES DIMENSIONS USED ONLY ON PARTS THAT HAVE THE ANTI-ROTATION NIB (SEE CHART). ANTI-ROTATION NIB NOT TO BE USED ON 0.8MM² AND SMALLER CABLE.

					13732012	01	AD	0.406 X 33.73	HIGH PERFORMANCE COPPER ALLOY	3 - 5	5.24 - 3.49	11	103	4.6	7.6	2.8	5.2	YES
					13732419	01	AC	0.406 X 33.73	HIGH PERFORMANCE COPPER ALLOY	1 - 2	3.97 - 2.48	15	103	3.7	6	2.8	5.2	YES
12124026	B2	-	0.406 X 33.73	COPPER ALLOY	12124057	B6	-	0.406 X 33.73	TIN PLATED COPPER ALLOY	TWO 1 - 0.8	2.7 - 1.9	217	102	4.3+/-0.3	6.6	2.4	5.2	YES
12052247	E2	-	0.406 X 33.73	COPPER ALLOY	12052219	E5	-	0.406 X 33.73	TIN PLATED COPPER ALLOY	0.5 0.35	2.51 - 1.84	21	102	2.4+/-0.2	3.8+/-0.3	2.4	5.2	**
12059243	E3	-	0.406 X 33.73	COPPER ALLOY	12052221	E9	-	0.406 X 33.73	TIN PLATED COPPER ALLOY	3	3.2 - 3.04	12	103	4.6	6	2.4	5.2	YES
12039823	H2	-	0.406 X 33.73	COPPER ALLOY	12084595	D6	-	0.406 X 33.73	TIN PLATED COPPER ALLOY	3 - 5	5.24 - 3.49	11	103	4.6	7.6	2.8	5.2	YES
12034822	I62	-	0.406 X 33.73	COPPER ALLOY	12124304	B5	-	0.406 X 33.73	TIN PLATED COPPER ALLOY	1 - 2	3.97 - 2.48	15	103	3.7	6	2.8	5.2	YES
		-			12020366	E6	-	0.406 X 33.73	TIN PLATED COPPER ALLOY	ONE 0.8-0.5 & ONE 2-1	3.12-2 & 3.97-2.48	1519	101	5.6	8.8	2.8	5.2	YES
12089141	F	-	0.406 X 33.73	COPPER ALLOY	12089142	G	-	0.406 X 33.73	TIN PLATED COPPER ALLOY	TWO 0.35	2 - 1.35	222	101	3.6	5.1	2.8	5.2	**
12089139	F	-	0.406 X 33.73	COPPER ALLOY	12089142	G	-	0.406 X 33.73	TIN PLATED COPPER ALLOY	0.35	2 - 1.35	22	101	2.2	3.6	2.8	5.2	**
12015934	E	-	0.406 X 33.73	COPPER ALLOY	12015915	F	-	0.406 X 33.73	TIN PLATED COPPER ALLOY	TWO 1	2.68 - 2.48	216	101	6.6	7.6	2.8	5.2	YES
12015831	D	-	0.406 X 33.73	COPPER ALLOY	12015863	E	-	0.406 X 33.73	TIN PLATED COPPER ALLOY	TWO 0.8 - 0.5	3.12 - 2.03	219	101	5.1	8	2.8	5.2	YES
12015832	D	-	0.406 X 33.73	COPPER ALLOY	12015862	E1	-	0.406 X 33.73	TIN PLATED COPPER ALLOY	5 - 3	5.24 - 3.49	11	101	4.6	7.6	2.8	5.2	YES
12015922	D	-	0.406 X 33.73	COPPER ALLOY	12015861	E	-	0.406 X 33.73	TIN PLATED COPPER ALLOY	2 - 1	3.97 - 2.48	15	101	3.7	6	2.8	5.2	YES
12015928	J4	-	0.406 X 33.73	COPPER ALLOY	12015860	K6	-	0.406 X 33.73	TIN PLATED COPPER ALLOY	0.8 - 0.5	3.12 - 2.03	19	102	3.2	5	2.8	5.2	**
12015132	F	-	0.406 X 33.73	COPPER ALLOY			-			TWO 0.8 - 0.5	3.12 - 2.03	219	101	5.1	8	2.8	5.2	YES
12015146	H	-	0.406 X 33.73	COPPER ALLOY			-			5 - 3	5.24 - 3.49	11	101	4.6	7.6	2.8	5.2	YES
12015145	H	-	0.406 X 33.73	COPPER ALLOY			-			2 - 1	3.97 - 2.48	19	101	3.7	6	2.8	5.2	YES
12015144	F	-	0.406 X 33.73	COPPER ALLOY			-			0.8 - 0.5	3.12 - 2.03	19	101	3.2	5	2.8	5.2	**
PART NO	REV	N/P	MAT'L SIZE	MAT'L SPEC	PART NO	REV	N/P	MAT'L SIZE	MAT'L SPEC	SIZE (MM²)	DIA	ID NO	BLANK TYPE	E±0.4	F±0.4	N±0.15	V±0.15	ANTI-ROTATION NIB
UNPLATED					PLATED					CABLE								

THE DRAWN TURRET / RAM NUMBER AND TOOL PHYSICAL PARTS ARE NOT AVAILABLE FOR CREATING

PART NUMBERS THAT OR NOT HAVE A LINE PRESENT INDICATE THAT PHYSICAL PARTS ARE AVAILABLE FOR ORDERING.

CONTACT DELPHI SALES TO ASSURE AVAILABILITY OF PARTS.

DWG TYPE: PART DRAWING

STYLE:

RELEASE (DAY): DESIGN OWN:

UNLESS OTHERWISE SPECIFIED:
DATA DISCREPANCY IS TO BE RESOLVED WITH DWG. FOR NOM DIMS WITH TOL, MACHINE TO NOM. FOR NOM DIMS WITHOUT TOL, MACHINE TO MATH DATA. DIMENSIONS ARE FOR PLATED PART. FEATURES MAY BE SHAVED IMPROPERLY REMARKABLE BY PLATING NOTED/REQ.

ALL DIMENSIONS ARE IN MILLIMETERS

DIMENSIONS AND ZONES IN ( ) BRACKETS ARE FOR REFERENCE ONLY AND DO NOT CONTROL

DIMENSIONAL RANGE (MM): SHORT C
FROM: 0 >10
TO: 10
TOLERANCE UNLESS OTHERWISE SPECIFIED: .XX±
ANGULAR TOLERANCE ±0°

THIRD ANGLE PROJECTION

DO NOT SCALE USE MATH DATA

NX

DELPHI

DELPHI PACKARD ELECTRICAL/ELECTRONIC ARCHITECTURE

COPYRIGHT 1996 DELPHI TECHNOLOGIES INC. & ITS AFFILIATES. ALL RIGHTS RESERVED.
THIS DRAWING IS THE PROPRIETARY INFORMATION AND CONFIDENCE DISTINCTIVE INFORMATION OF DELPHI TECHNOLOGIES INC. & ITS AFFILIATES. BY THE TRANSMITTAL OF THIS DRAWING OR ANY DISCLOSURE OF ANY CONTENT TO OTHERS, WE WILL NOT CONSIDER ANY OF THE FOREGOING TO BE A PUBLICATION WITHOUT EXPRESS AUTHORIZATION, IT PUBLISHED.

	DATE
DR S.L. PETERSON	09NOV84
APVD T. HERTON	24NOV84
APVD J.S. PITNEY	12DEC84
APVD E.J. TOLNAR	12DEC84
APVD	
APVD	

SUBSTANCES OF CONCERN AND RECYCLED CONTENT PER DELPHI SPEC

MATERIAL: SEE CHART

DRAWING NAME: TAXI TERM F M/P 480

SIZE	SCALE	TRANS NO	SHEET NO	STS	REV	N/P
AD	10:1	1 OF 1	1 OF 1	R	14	-

12015247